Fermilab

Managed by Fermi Research Alliance, LLC for the U.S. Department of Energy Office of Science

High Intensity Superconducting Proton Accelerator: Physics, Material and Energy Application

Shekhar Mishra
Deputy Project Manager, PIP-II
Indian Institute and Fermilab Collaboration
PIP-II/LBNF-DUNE
Fermi National Accelerator Laboratory

Introduction

- Particle Accelerator Technology originally built by physicists
  - Understanding of the universe
- Today Particle accelerators is a common tool for Biomedical, Material and Energy research.
- High brightness beams from the particle accelerators have enabled scientists
  - Medical research and treatments
  - Caner Treatment
  - Cell biology and understanding of protein function as engine of life
  - Aid in the development of new pharmaceutical,
- Pioneer nano-technologies whose scale is measured in billionths of meter are backbone of future industry and technology.
- Far reaching impact on accelerator technology, economy, heath.
  - Fundamental knowledge of the materials that make up our world.
  - Clean Nuclear Energy

Fermilab:

Fermilab: An International Laboratory

Major Discoveries and Technology: Fermilab

- Discovery of the Higgs boson (CERN)
- Tevatron Seeing hits of the Higgs Boson
- Discovery of the top quark ← (IIFC)
- Discovery of the bottom quark
- Observation of tau neutrino
- Discovery of a quasar at a distance of 27 billion light-years
- Observation of direct CP violation in kaon decays
- Confirming evidence of dark energy
- Technology
  - Superconducting wire
  - Computing
  - Medical Imaging

The God Particle: Leon Lederman

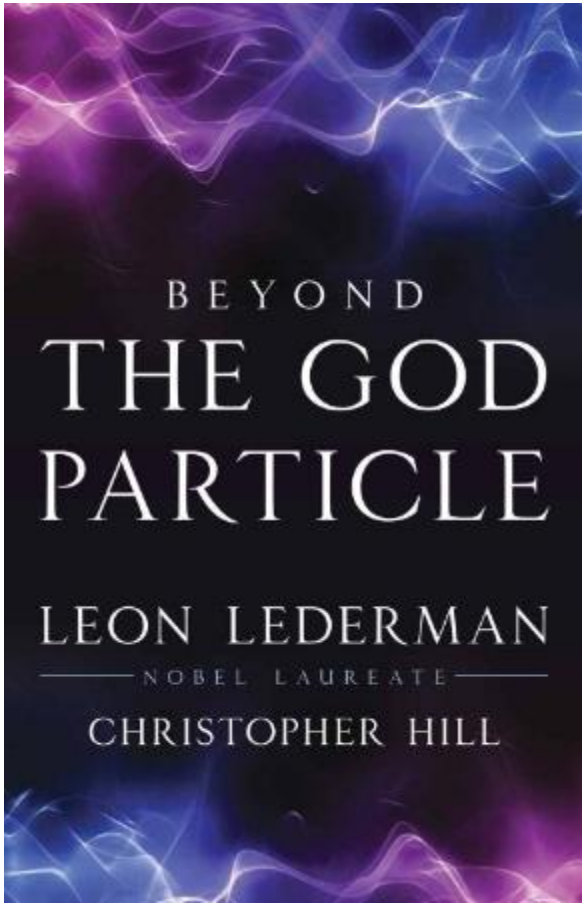

- Discovery of two Neutrino
- Missed the J/ψ
- Discovery of bottom quark

On July 4th 2012 the God Particle

Higgs gives mass to quarks & charged leptons

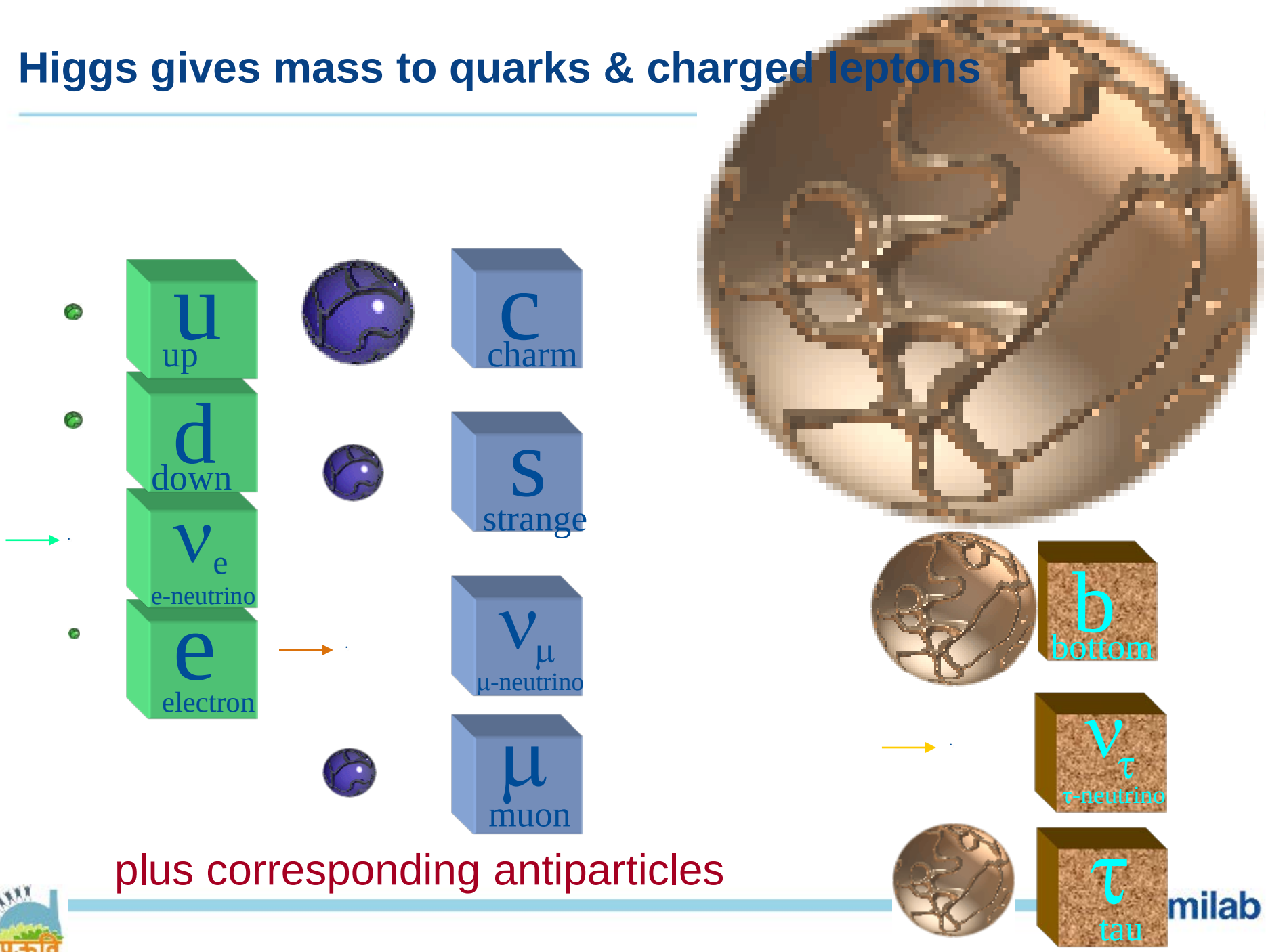

plus corresponding antiparticles

What next at Fermilab

- **The leadership of Particle Physics Energy Frontier has moved to CERN, Geneva, Switzerland.**
- **Fermilab is focusing on talking a world leadership position in the Intensity Frontier High Energy Physics**
  - **Neutrino Physics**
  - **Muon Physics ($\mu \rightarrow e$)**
- **Applied Research**
  - **Energy Application**
  - **Material Research for application**
- **Accelerator technology development**
  - **Superconducting Linac with high efficiency**

DAE has played a major role in shaping this future.

Why are neutrinos interesting?

- Higgs discovery brings flavor & mass issues to the forefront
- The wide range of quark masses is puzzling
  - The top quark discovery is an exclamation mark on that
- The ultra-tiny neutrino mass doesn't fit the standard model
  - In fact we do not understand neutrinos mass…..other than it has mass…
- One future lies in better understanding neutrinos
  - their mass ordering
  - the origin of their masses and why they are so small
  - their interactions (CP Violation)
  - how many types of neutrinos…..3-neutrino paradigm
  - relationship to matter-antimatter asymmetry in universe and structure of the universe

Energy Application

- **High Intensity Proton Accelerator**
  - **Transmutation of nuclear waste**
  - **Converting Thorium into fissile material**

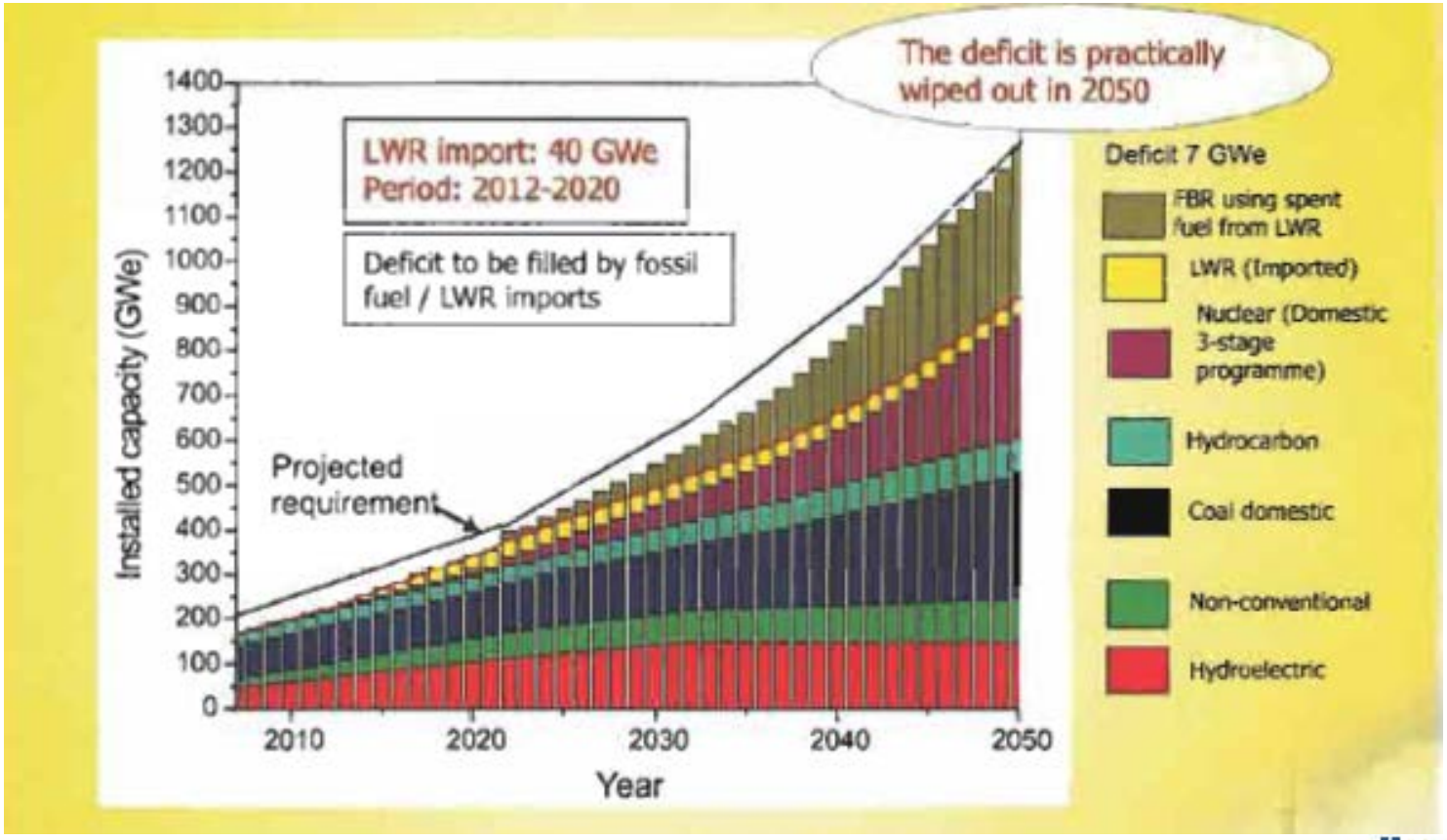

Energy Application 10+ yrs Strategy

1 GeV,
Continuous Wave,
High Intensity, Proton,
Superconducting
Radio Frequency,
Accelerator:
Fermilab

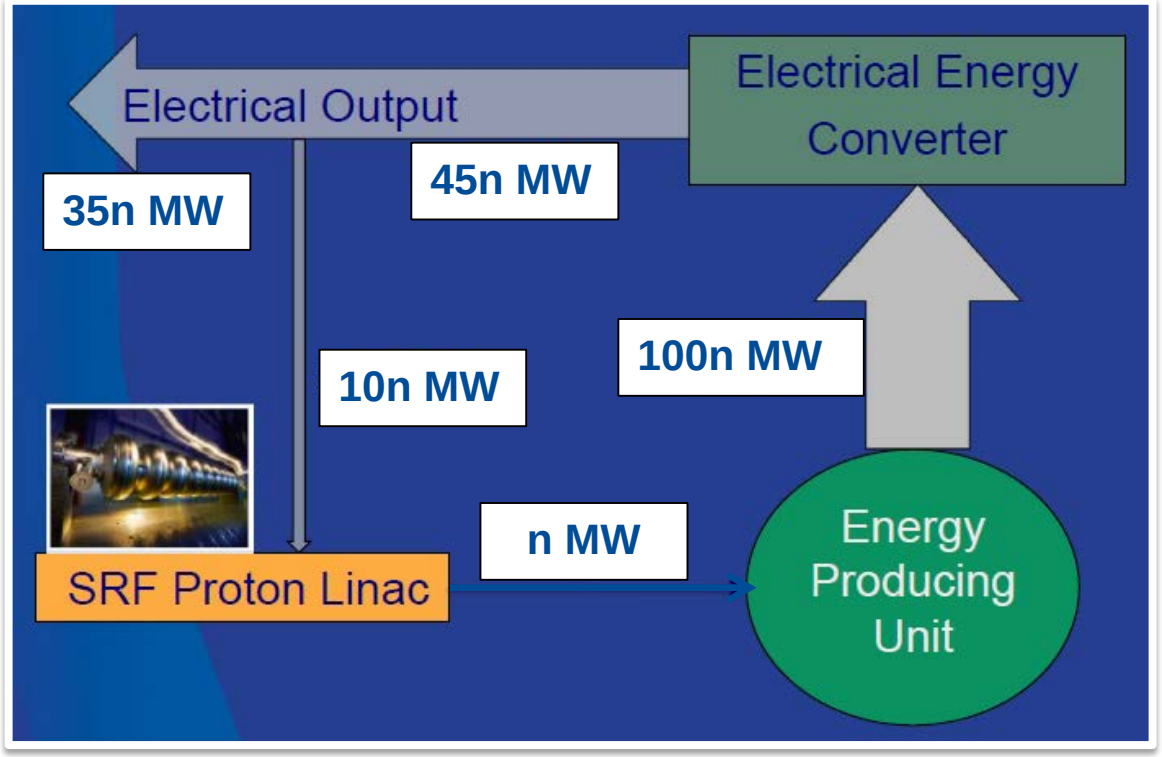

- **A multi-MW Proton Source:**
  - **Multi MW CW beam at 1-2 GeV (similar to Fermilab PIP-II) could be the accelerator technology demonstration project corresponding to 10s of MW electrical power.**

Transmutation of Nuclear Waste

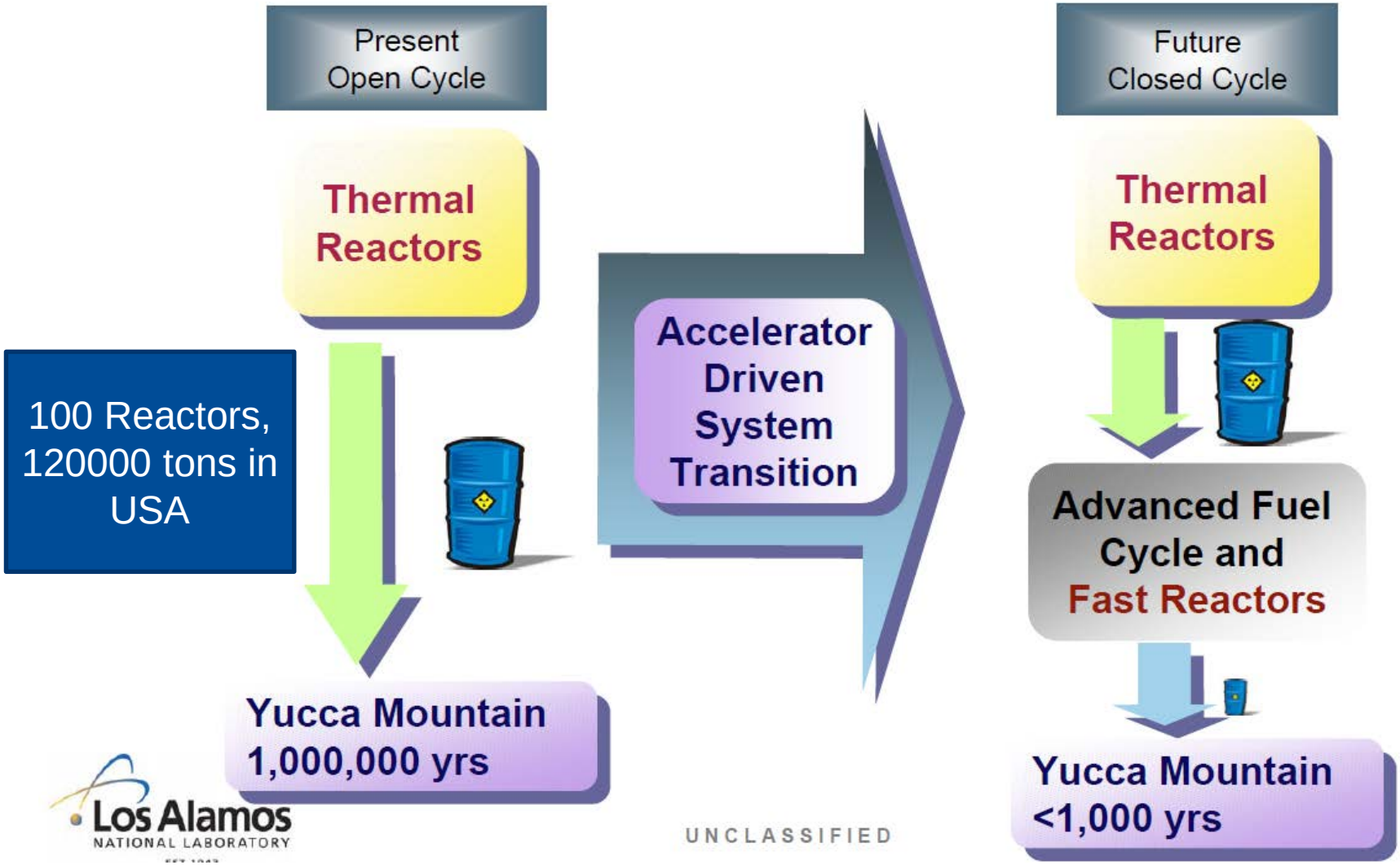

Los Alamos NATIONAL LABORATORY

UNCLASSIFIED

Slide 5

Proton and Ion Treatment

- Charged particle beams have an intrinsic physical advantage over traditional X-Ray treatment.
- X-ray destroys more healthy tissues on way to tumor and continues to destroy out of the tumor.
- Charged particle beam has relatively less damage on the way to tumor and can be tailored to stop in the tumor.

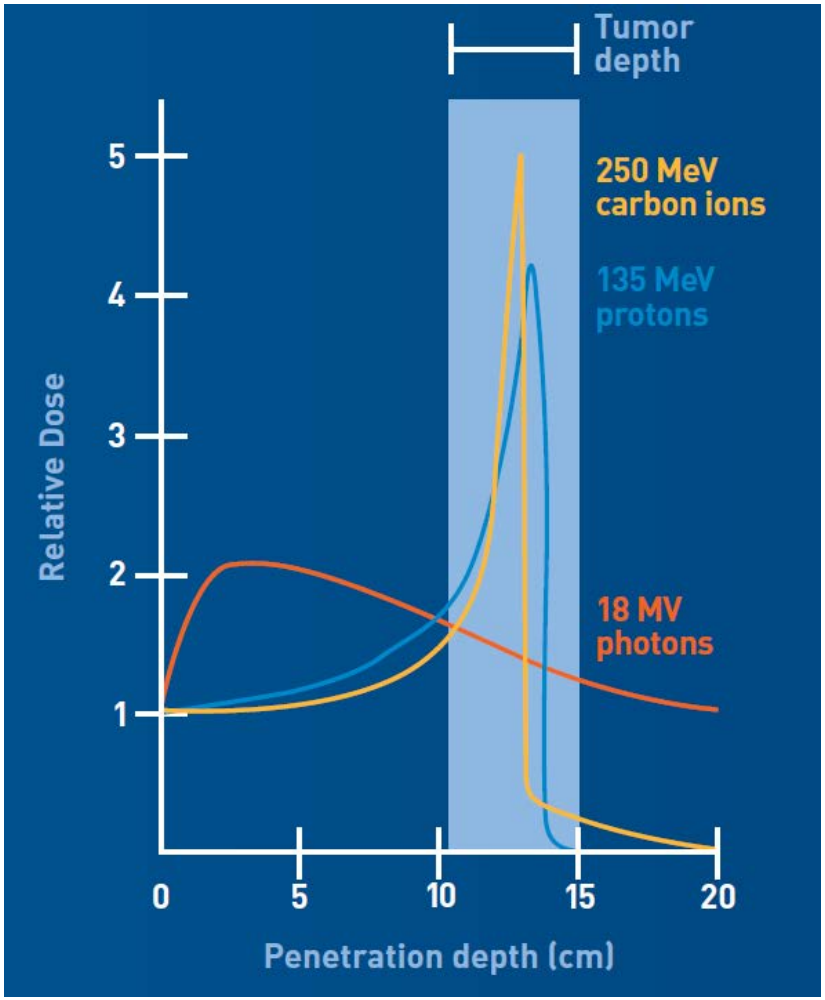

Need and Opportunity

- Fermilab build US 1st proton therapy center in 1980's.
  - Loma Linda (CA)
- Today most of the world has no Proton or Charge Particle cancer treatment center.

The number of particle therapy facilities worldwide is growing rapidly. In 2008, there were 70,000 patients at centers around the world, nearly double the number in 2005. *Image source: J. Debus, Heidelberg Ion Therapy Center*

- **Technology being developed under the Discovery Science Collaboration would enable technology needed for the construction and operation of such a facility in a cost effective manner.**

IIFC: Opportunity

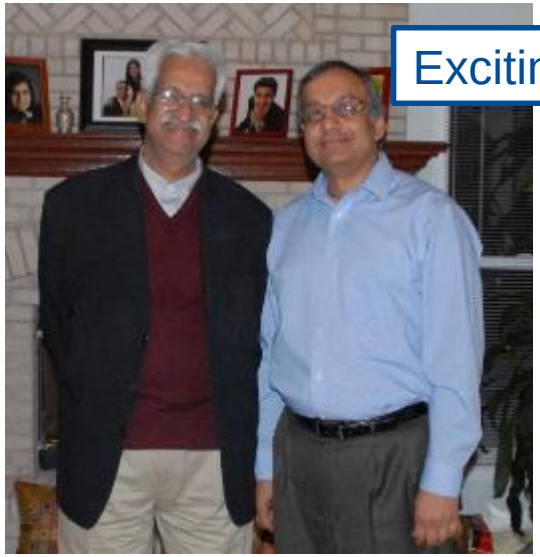

Exciting science

Training of future scientist

Jointly build DAE Accelerator

Leapfrog Indian program

Strengthens India's scientific and Industrial infrastructure

Introduction to IIFC

- Fermilab has proposed the construction of
  - High Intensity Superconducting Proton Accelerator (HISPA) (aka PIP-II)
  - Long Baseline Neutrino Facility (LBNF)
- DAE laboratories have proposed the construction of
  - Indian Spallation Neutron Source at RRCAT, Indore
  - Accelerator for Medical, Energy and Industrial applications at BARC
- HISPA R&D phase collaboration
  - Fermilab, BARC, Mumbai, IUAC, New Delhi, RRCAT, Indore and VECC, Kolkata
- Intensity Frontier Neutrino Experiment (IFNE) R&D phase collaboration
  - Fermilab, 15 Indian institutions funded by DAE and DST for Neutrino Collaboration
- HISPA, Project Annex I signed between DAE and DOE
- IFNE, Project Annex II going through approval process in India, expect to get it finalized soon.

Indian Institutions and Fermilab Collaboration

- **The collaboration signed MOU to collaborate on**
  - **High Intensity Superconducting Proton Accelerator for the respective domestic programs**
    - **Concept of "Total Project Collaboration" on Accelerator**
  - **Intensity Frontier Neutrino Experiments (MINOS, NOvA and LBNF)**
    - **Develop LBNF-ND physics and Detector Technology**

2010: DAE-DOE Discussions

- Jan 2010, Dr. Dennis Kovar, Associate Director, US-DOE-HEP visited DAE
  - Idea of three Phase Collaboration Developed
    - Phase 1 (SRF)
    - Phase 2 (no-SRF)
    - Phase 3 (Construction)
- May 2010, Secretary, DAE, requested US-DOE a Road Map for the Fermilab collaboration on High Intensity Proton Accelerator
  - Mr. Poneman, Deputy Secretary, DOE and Dr. Banerjee agreed to develop a DOE-DAE agreement
    - The concept of "Discovery Science" collaboration emerged
- Fermilab and Indian-DAE established working groups to develop plans for
  - Accelerator Programs
  - Indian Collaboration in Fermilab physics program

PIP-II R&D Technical work under Institution MOU

1. Collaboration on ILC Main Linac SRF Accelerator Technology R&D" (October 2, 2007)
2. Collaboration on ILC RF Power Sources and Beam Dump Design R&D" (December 3, 2007)
3. Collaboration on High Intensity Proton Accelerator and SRF Infrastructure Development" (February 10, 2009)
4. Collaboration on Neutrino Physics, Related Experiments and Detector Development (Nov 2009)
5. Collaboration on RF Power (325 MHz) Development for High Intensity Proton Accelerator" (August 22, 2011)
6. Collaboration on RF Power (650 MHz) Development for High Intensity Proton Accelerator" (Aug 22,2011)
7. Collaboration on Instrumentation and Control for High Intensity Proton Accelerator" (Aug 22, 2011)
8. Collaboration on Accelerator Physics issues for High Intensity Proton Accelerator" (Aug 22, 2011)

US-India Strategic Dialogue

SCIENCE & TECHNOLOGY DIALOGUE, WASHINGTON, DC ///

MEET THE CATALYST

June 11, 2012

At the end, the Joint Commission recommended several new directions of cooperation including research in the areas of high energy particle physics and gravitational wave detection under the 'Discovery Science Agreement' between Department of Atomic Energy and U.S. DOE. In Basic and Applied sciences — materials research, computer sciences and neurosciences have been identified as potential areas of future engagement.

Accelerator and Physics Programs Technical Collaboration are No 1 deliverables to the Joint US-India Science Working Group

DAE-DOE Project Annexes

- Jan 2012
  - DOE submitted DRAFT Project Annex I (Accelerator) and Project Annex II (Intensity Frontier Neutrino Experiment) to DAE
    - DOE has received initial approval to proceed for US Agencies
- July 2012 – Feb 2013
  - DAE, DOE and US Government Agencies worked to finalize the agreement and froze the language of Annex I and II.
    - DAE initiated internal India approval process
- May - Aug 2013
  - Final deliverable document for Annex I was agreed by DAE-DOE
  - Collaboration also forwarded a Detailed Project Reports.
- Aug 2013
  - The Atomic Energy Commission(AEC) of India Recommended Annex I for approval from the Government of India
  - The DAE and DST has given in principle approval to Annex II.
    - Funding for R&D phase has been approved by DAE and DST
    - DAE is working to finalize the approvals
- Sept 2014
  - Indian PM Cabinet gave the final approval to Project Annex I
- Jan 2015
  - Project Annex I was signed by Dr. Sinha and Dr. Moniz

DOE-DAE Implementing Agreement and Annex I

IMPLEMENTING AGREEMENT

BETWEEN

THE DEPARTMENT OF ENERGY OF THE UNITED STATES OF AMERICA

AND

THE DEPARTMENT OF ATOMIC ENERGY

OF THE REPUBLIC OF INDIA

FOR COOPERATION

IN THE AREA OF ACCELERATOR AND PARTICLE DETECTOR RESEARCH

AND DEVELOPMENT FOR DISCOVERY SCIENCE

DONE at New Delhi, in duplicate, this 19th day of July 2011, in the English and Hindi languages, each text being equally authentic.

FOR THE DEPARTMENT OF ENERGY OF THE UNITED STATES OF AMERICA:

FOR THE DEPARTMENT OF ATOMIC ENERGY OF THE REPUBLIC OF INDIA:

PROJECT ANNEX I

TO THE IMPLEMENTING AGREEMENT
BETWEEN
THE DEPARTMENT OF ENERGY OF THE UNITED STATES OF AMERICA
AND
THE DEPARTMENT OF ATOMIC ENERGY
OF THE REPUBLIC OF INDIA
FOR COOPERATION
IN THE AREA OF ACCELERATOR AND PARTICLE DETECTOR RESEARCH AND DEVELOPMENT FOR DISCOVERY SCIENCE
FOR
HIGH INTENSITY PROTON ACCELERATORS

DONE at Mumbai, in duplicate, this 6th day of Nov. 2014.

FOR THE DEPARTMENT OF ENERGY OF THE UNITED STATES OF AMERICA:

Washington
January 21, 2015

FOR THE DEPARTMENT OF ATOMIC ENERGY OF THE REPUBLIC OF INDIA:

Indian Institutions at Fermilab

Before 2006

Dzero Experiment

+

Now

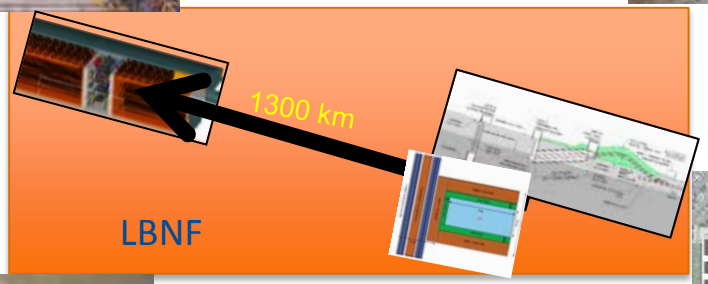

tifr

+

BARC

igcar

IUAC

Manipal
INSPIRED BY LIFE

Indian Institutions Accelerator Projects

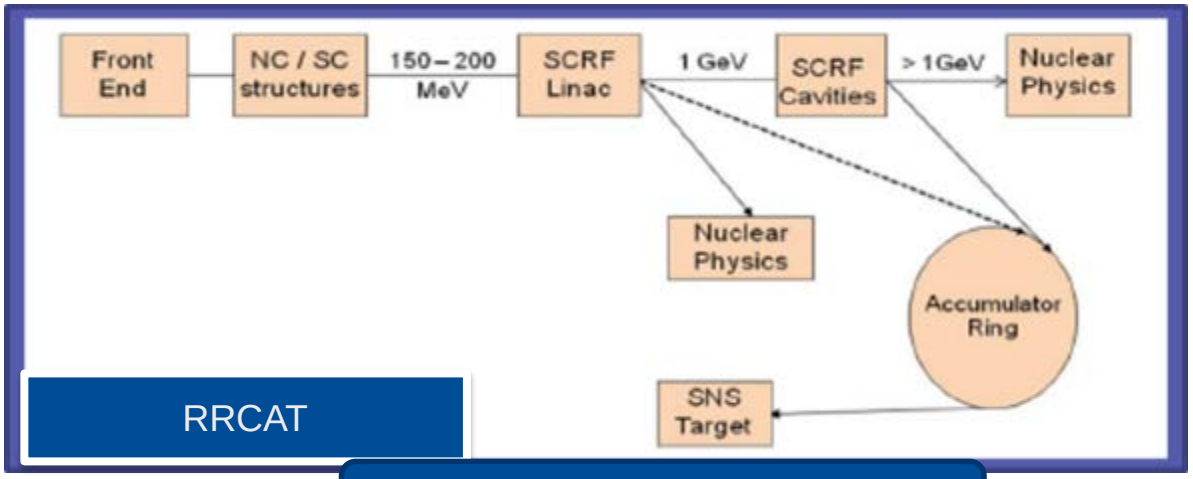

RRCAT

Material Science

RRCAT: ISNS

BARC: Ion Accelerator

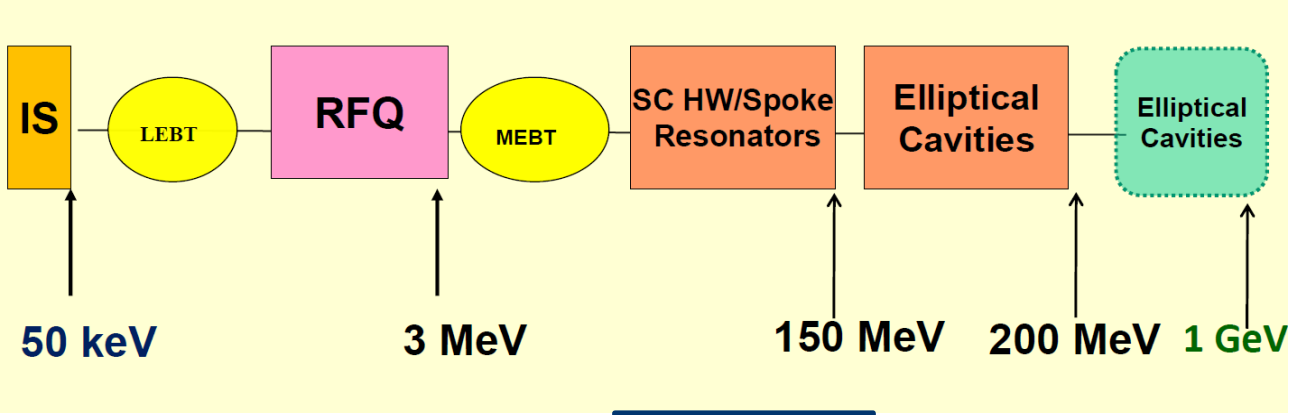

BARC

Ion Accelerator

Fermilab: PIP-II

- **High Intensity Superconducting Proton Accelerator (HISPA) (aka PIP-II) is a ~1 GeV Linac.**
  - **The design of this machine is similar to the two Indian accelerators.**
  - **It is design to provide 1.2 MW of beam for Deep Underground Neutrino Experiment (DUNE) on day one of its operation.**
  - **It is upgradable to 2.4 MW.**
- **PIP-II will be build with significant "In-Kind" contributions of accelerator components from foreign countries.**
  - **India is a significant partner**

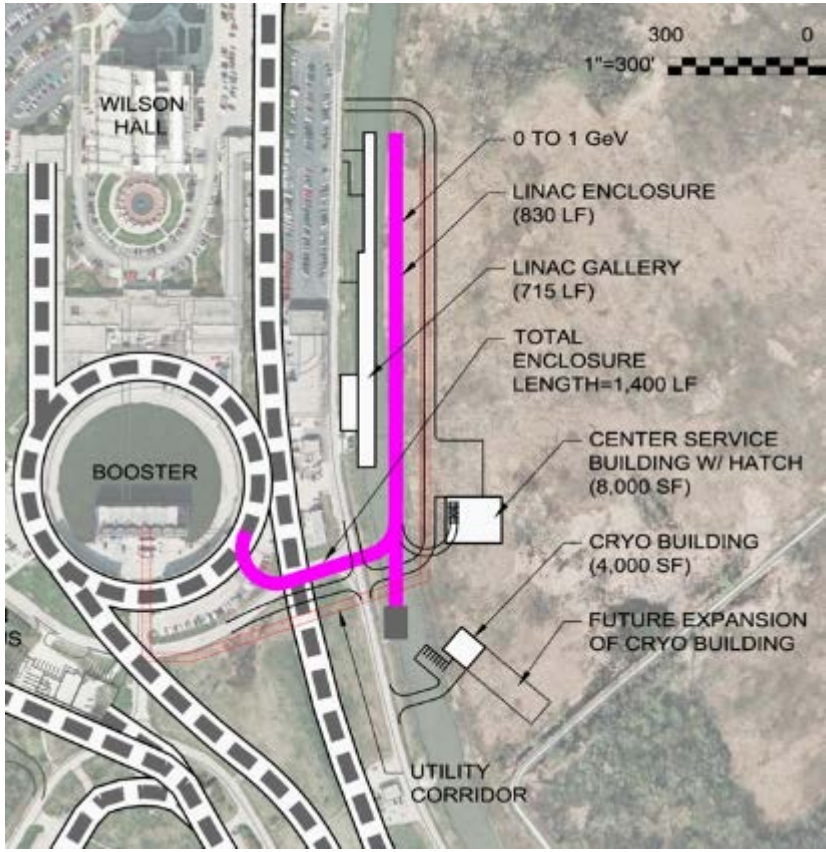

PIP-II (Proton Improvement Plan–II)

The PIP-II goal is to support long-term physics research goals by providing increased beam power to LBNF, while providing a platform for the future

- **Design Criteria**
  - **Deliver >1 MW of proton beam power from the Main Injector over the energy range 60 – 120 GeV, at the start of LBNF operations**
  - **Support the current 8 GeV program including Mu2e, g-2, and short-baseline neutrinos**
  - **Provide an upgrade path for Mu2e**
  - **Provide a platform for extension of beam power to LBNF to >2 MW**
  - **Provide a platform for extension of capability to high duty factor/higher beam power operations**
  - **At an affordable cost to DOE**
- **Goal: Initiate operations in newly-configured complex in ~2024**

PIP-II Site Layout

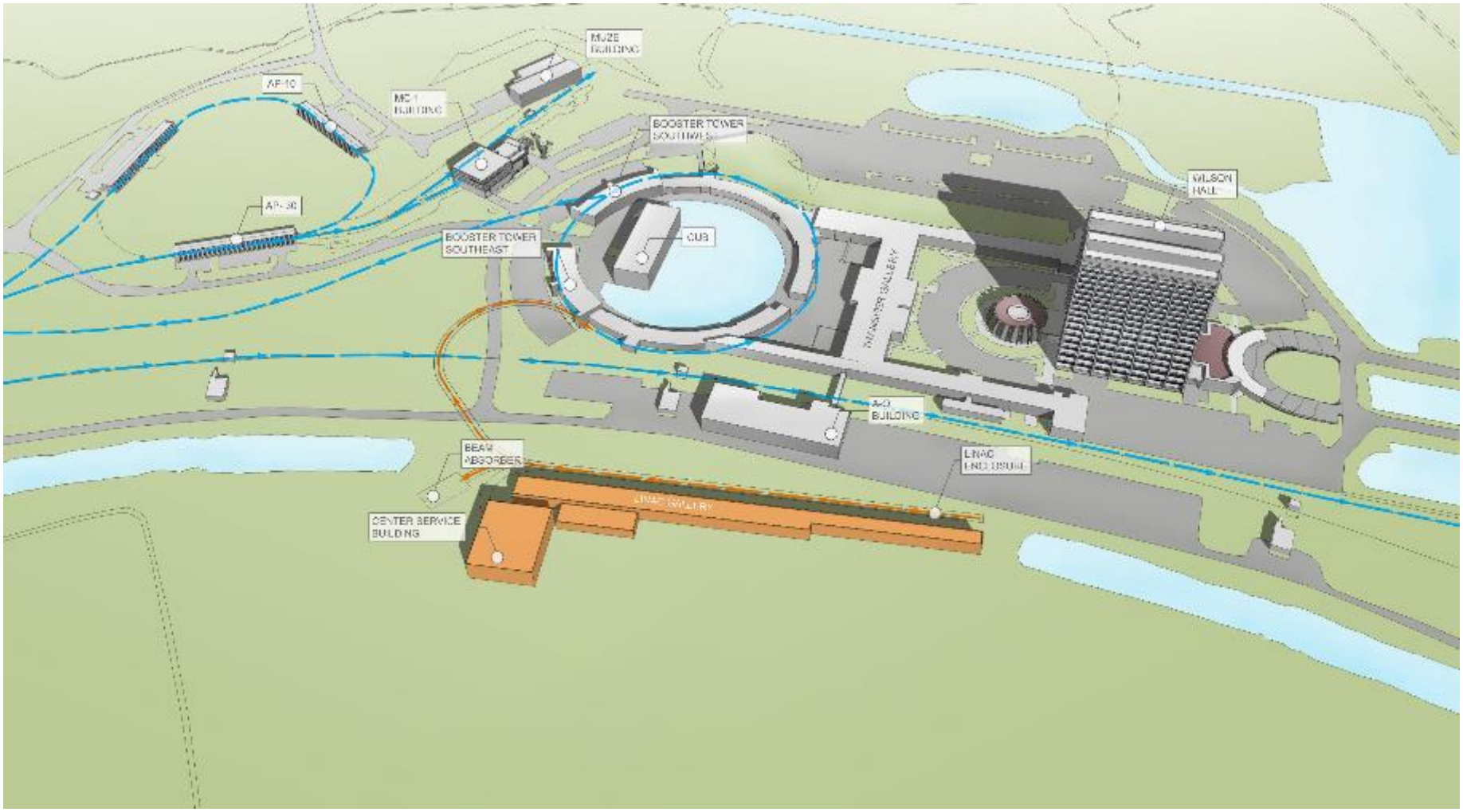

Flexible Platform for the Future PIP-III

- **Opportunities for Booster replacement include full energy (8 GeV) linac or RCS**

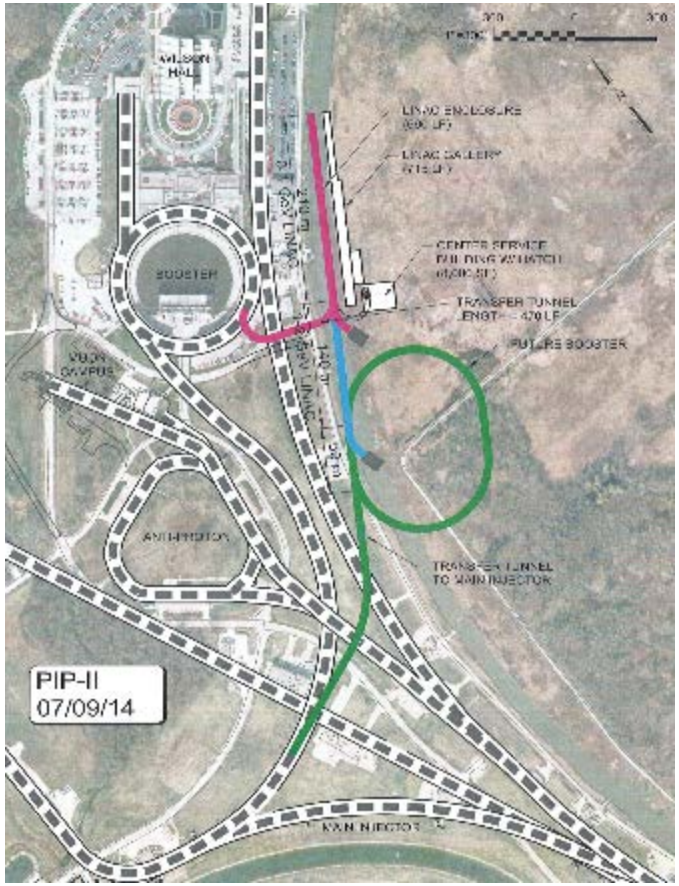

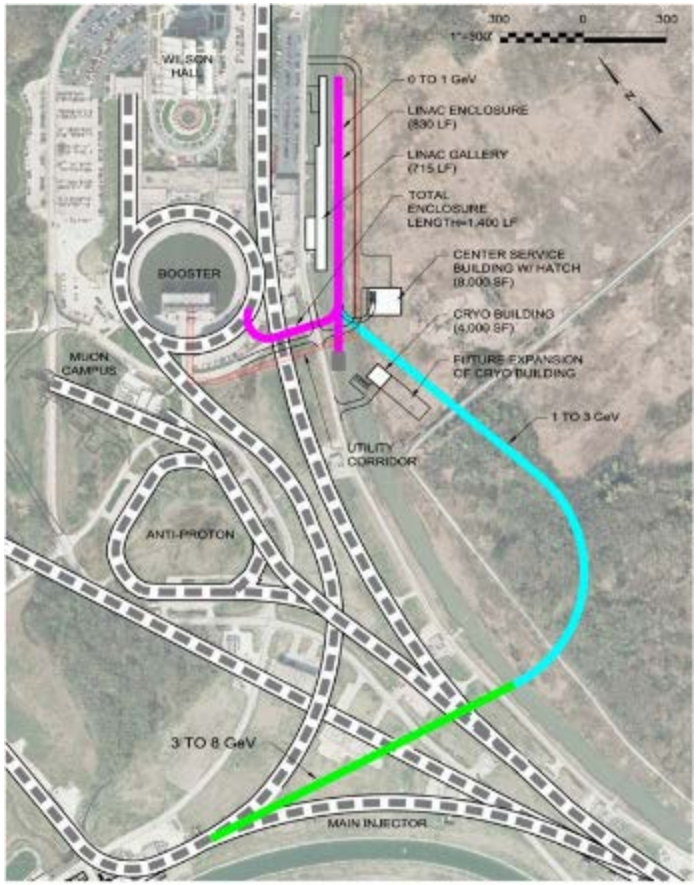

PIP-II Collaboration

- Organized as a "national project with international participation"
  - Fermilab as lead laboratory
- Collaboration MOUs for the development phase (through CD-2) :

National		IIFC
ANL	ORNL/SNS	BARC/Mumbai
BNL	PNNL	IUAC/Delhi
Cornell	UTenn	RRCAT/Indore
Fermilab	TJNAF	VECC/Kolkata
LBNL	SLAC	
MSU	ILC/ART	
NCSU		

- Annex I to the U.S. DOE-India DAE Implementing Agreement signed in January 2015
  - Significant Indian contribution to PIP-II R&D and construction
  - Joint DOE-DAE evaluation of R&D accomplishments in CY2018
- Ongoing contacts with CERN (SPL), Orsay, RAL/FETS (UK), ESS (Sweden)

IIFC Collaboration

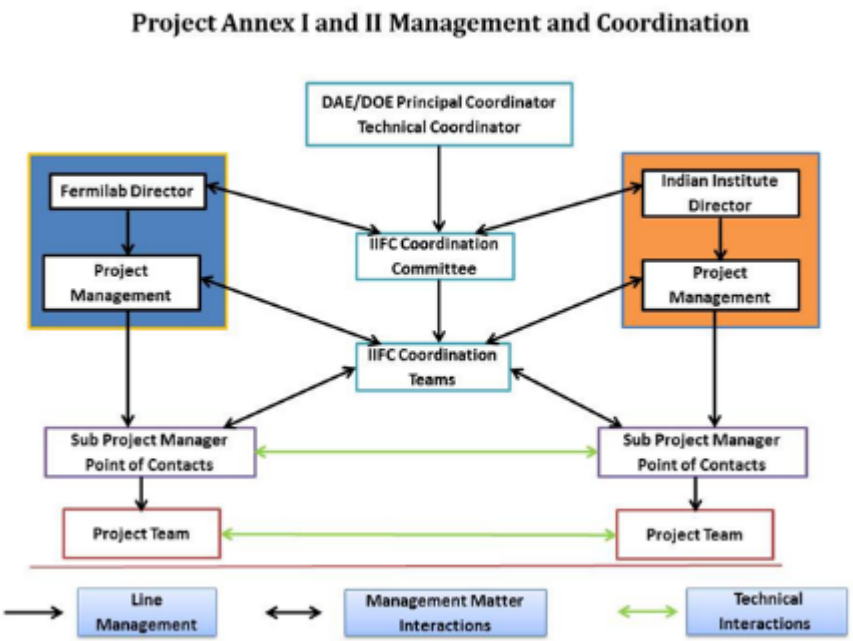

Areas of collaboration

- HISPA Design
- High Intensity Particle Source
- Radio Frequency Quadrupole
- Superconducting Radio Frequency Cavities and cryomodule
- Cavity Helium Vessel and Tuner
- Radio Frequency Power
- High Power Radio Frequency Coupler
- Distribution, monitoring and control of High Power Radio Frequency
- Normal and Superconducting Solenoid, Dipole and Quadrupole magnets
- Beam Instrumentation
- HISPA Control
- Cryogenic Plant, distribution and control
- HISPA utilities including electricity, water, vacuum
- HISPA integration
- Superconducting Radio Frequency Cavity Processing Facilities and Test Stands, Infrastructure

- All the technical work are being carried out by the Project Teams at Fermilab and the collaborating Indian laboratories.
  - Under the supervision of the Sub Project Mangers (SPM) and Point of Contacts (POC)
- SPM working with the PIP-II Project Management
  - Develop a Functional Specification Document for each component.
- SPM-Fermilab working with their Indian counterpart
  - Develop a Technical Specification for the work to be perform.
- SPM (POC) and Project teams meet weekly or as needed to discuss progress and technical issues.
- Fermilab maintains a Share Point Database for all the documents, drawings produced and shared by IIFC.

IIFC: Accelerator

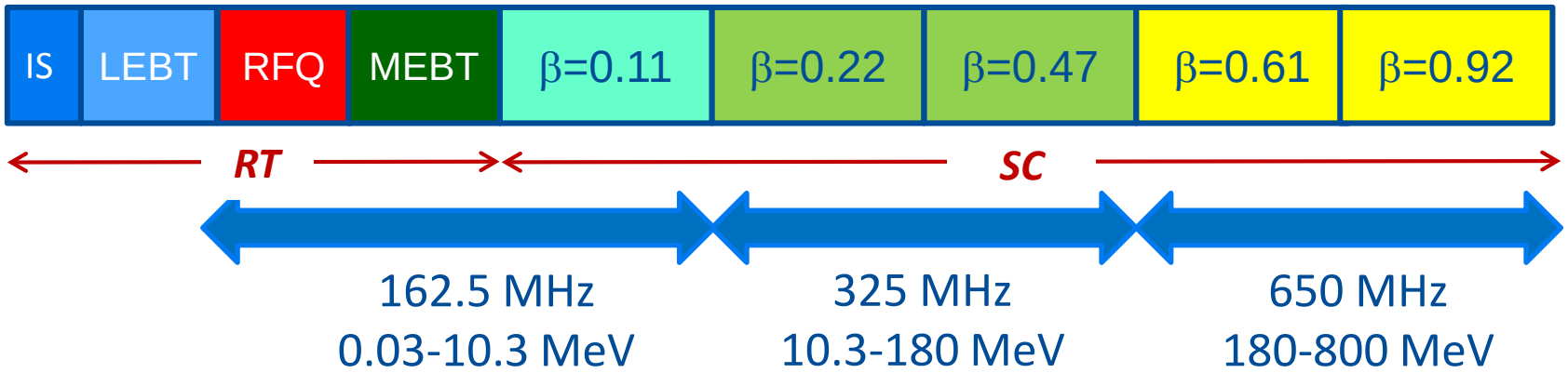

- **Basic design of the three SRF machines are <u>exactly</u> the same**
  - **DAE laboratories and Fermilab are jointly doing Research, Design and Development of the accelerators and infrastructure**
- **Fermilab HISPA (aka Project X or PIP-II)**
  - **Phase I: 0.8-1 GeV (Pulsed and CW, maximum current 2 mA)**
  - **Phase II: 1-3 GeV (Pulsed and CW, maximum current 1 mA)**
  - **Phase III: 3-8 GeV (Pulsed, maximum current 1 mA)**
- **BARC**
  - **1 GeV (CW, maximum current 10 mA)**
- **RRCAT**
  - **1-1.5 GeV (Pulsed, maximum current 1 mA)**

Indian Collaboration on PIP-II R&D

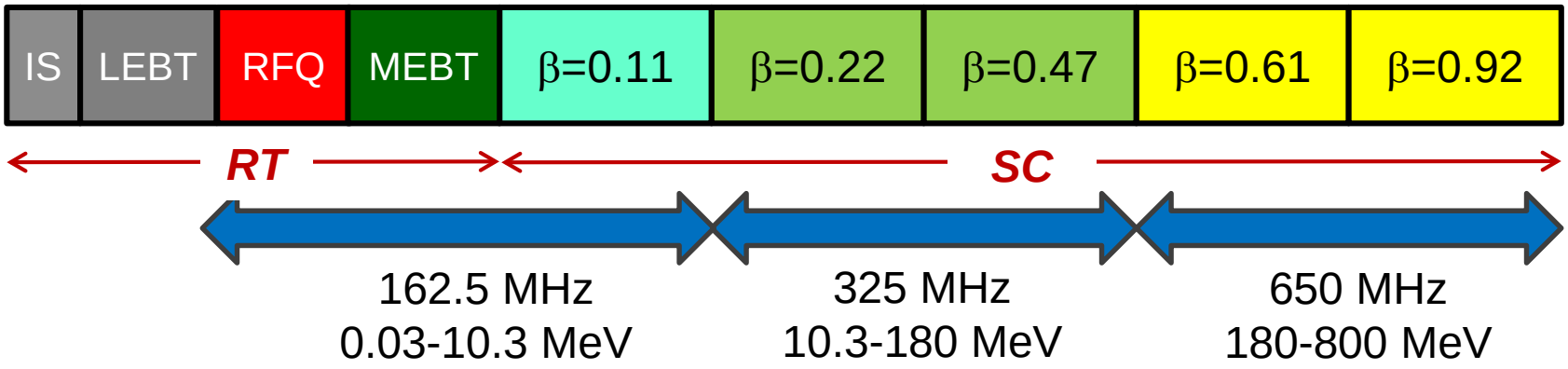

High Power Tested Dressed SRF Cavity

- β = 0.22: IUAC & VECC
- β = 0.47: BARC & IUAC
- β = 0.61: VECC/(Europe)
- β = 0.92: RRCAT
- 325 MHz RF Power: BARC
- 650 MHz RF Power: RRCAT

Non SRF components (BARC)

- Cryogenic Plant and Distribution
- RF
  - LLRF
  - Protection System
- Instrumentation: BPM, BLM
- Controls
- MEBT Magnets

PIP-II Source, LEBT and MEBT

- **PIP-II Ion Source and LEBT installation almost complete for RFQ commissioning.**

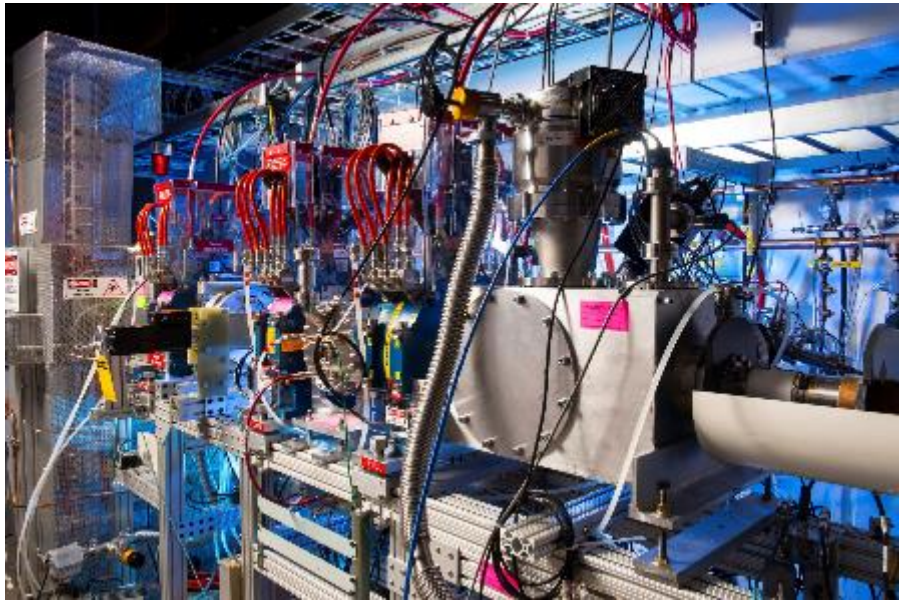

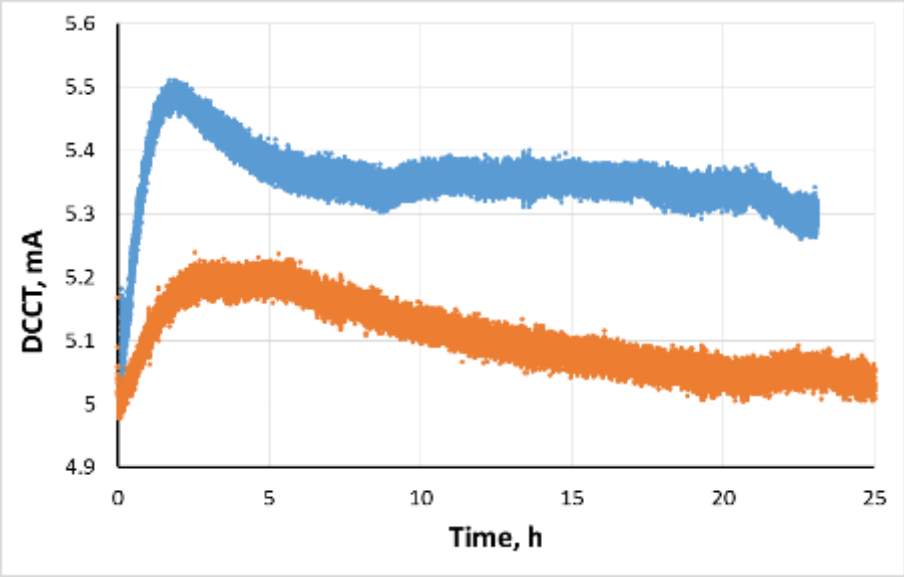

- **CY15 – Beam through RFQ**
  - **Pulsed then CW**
- **FY16 – installation and initial commissioning of full–length MEBT**
- **FY17 – MEBT characterization**
- **FY18 – demonstration of bunch-by-bunch separation**

Radio Frequency Quadrupole

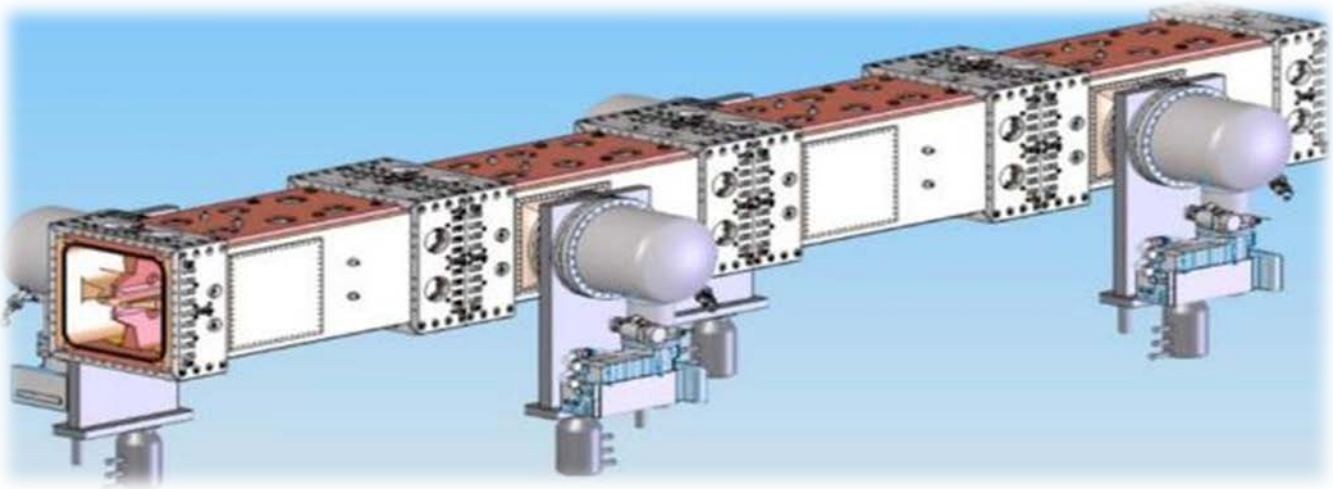

RFQ Commissioning Schedule

First Beam Nov 15

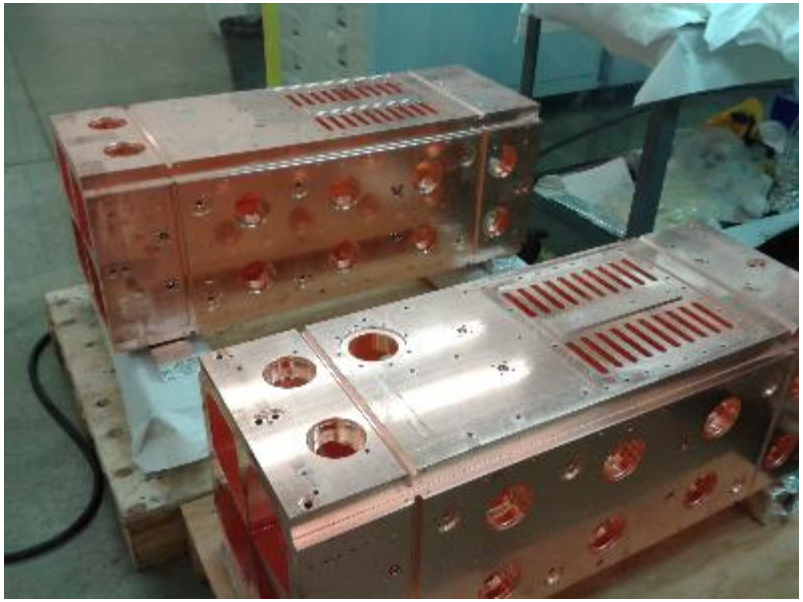

Half Wave Resonator Cryomodule

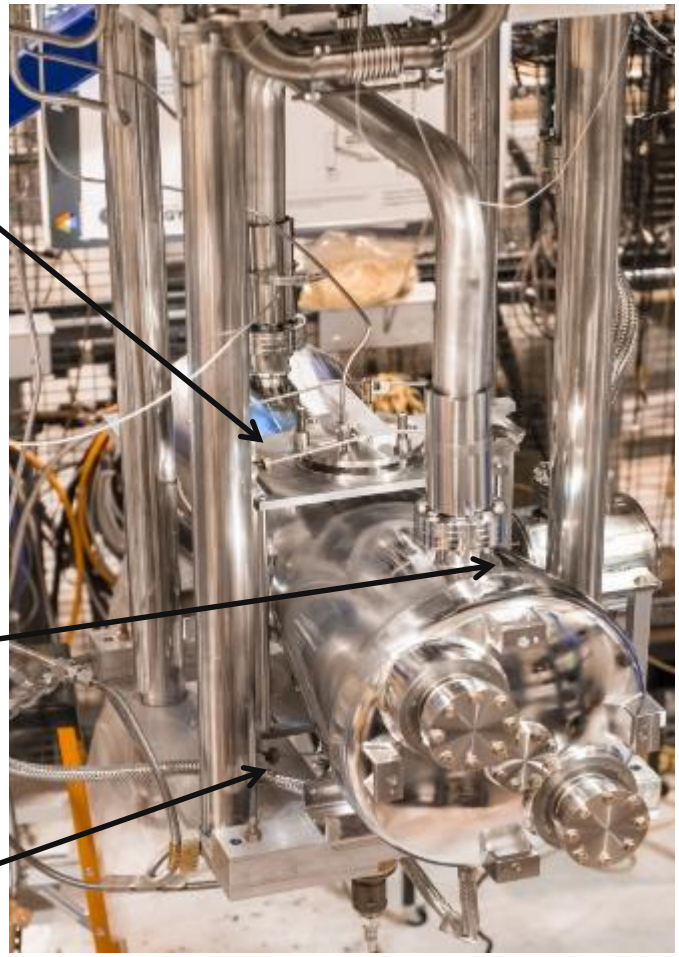

- **FY17**
  - **Beam Commissioning**

Test Results of the First Two Cavities

- Testing was done with adjustable coupler in critical coupling (low RF power).
- Residual resistance is 2.6 nΩ up to 14 MV/m.
- Design field is 8 MV/m, $Q_0=7\times10^9$.
- df/dP = ~13 Hz/Torr.
- Lorentz detuning coefficient is K_L = ~-1.5 Hz/(MV/m)^2.

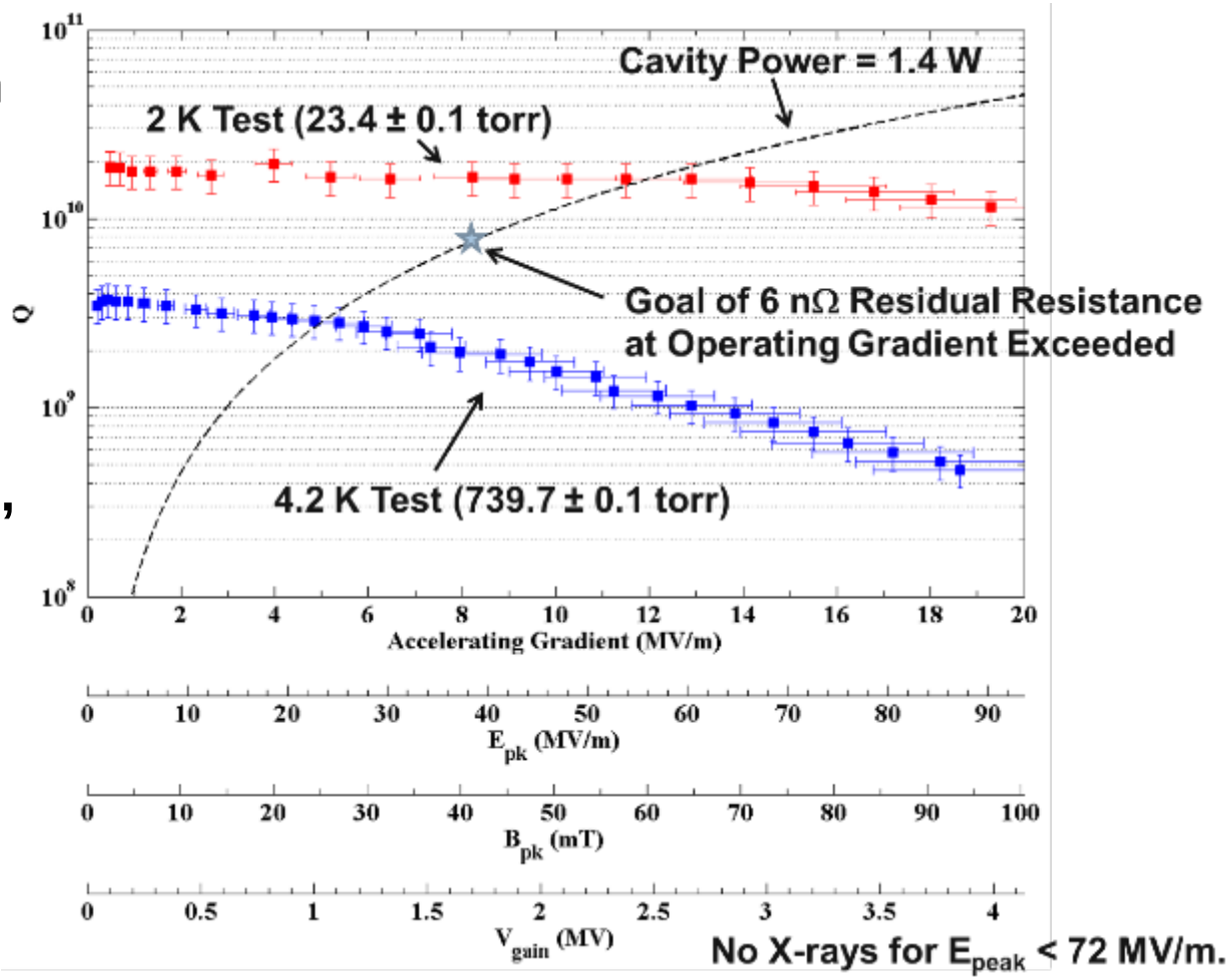

Spoke Test-Cryostat

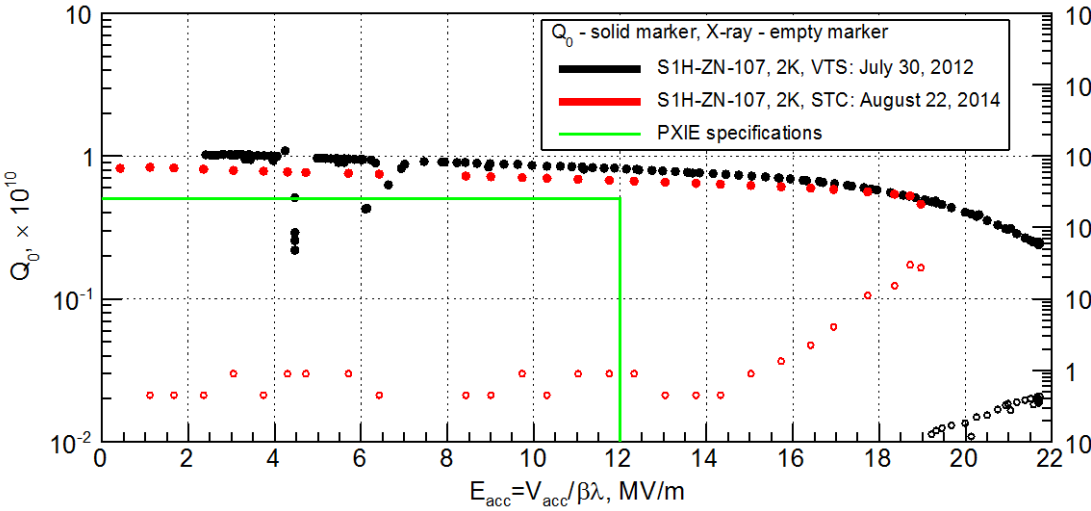

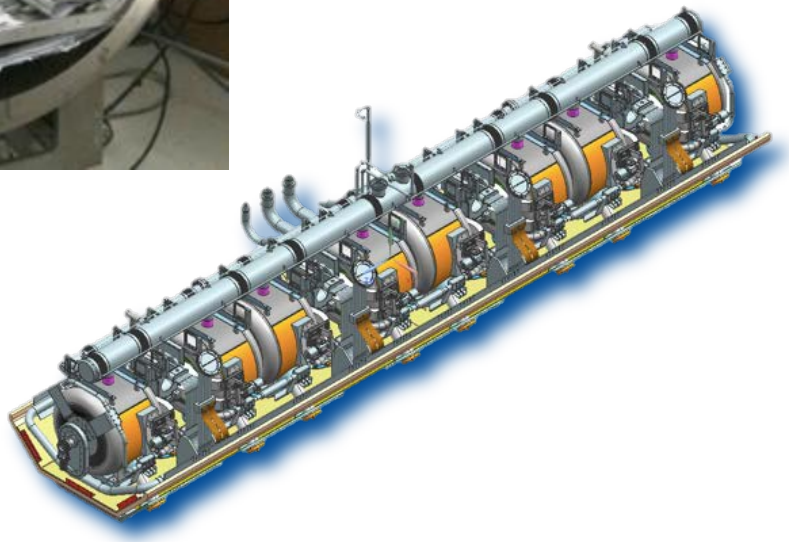

IIFC: β = 0.22 R&D: IUAC and VECC

- IUAC has finished fabrication of two SSR1 cavities.
- Being shipped to Fermilab later this month.
- Will be processed and VTS at ANL and Fermilab
- Cavities will be returned to VECC for He Jacket, Tuner and Coupler attachment
- Results should be presented at SRF2015

IIFC: SSR1 CM

- **VECC is working on the Helium Vessel, Tuner for SSR1 and design of SSR1/SSR2 CM.**
- **VECC engineers work on specific mechanical engineering tasks that are integrated in the Fermilab design.**

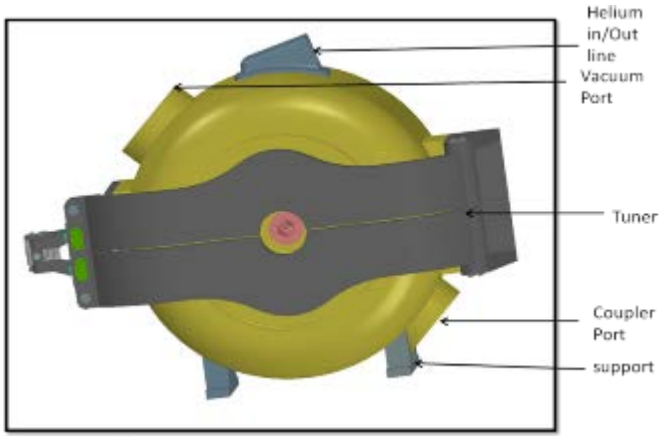

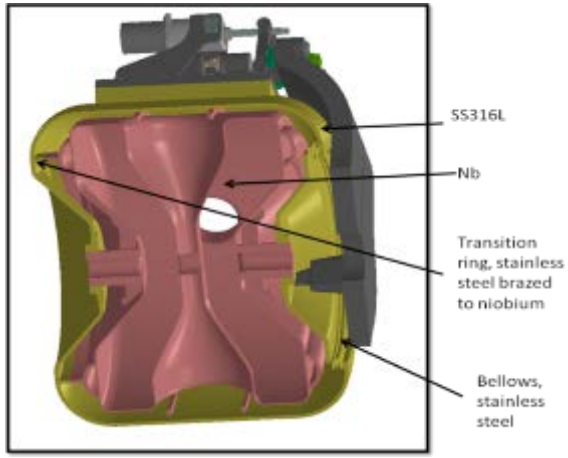

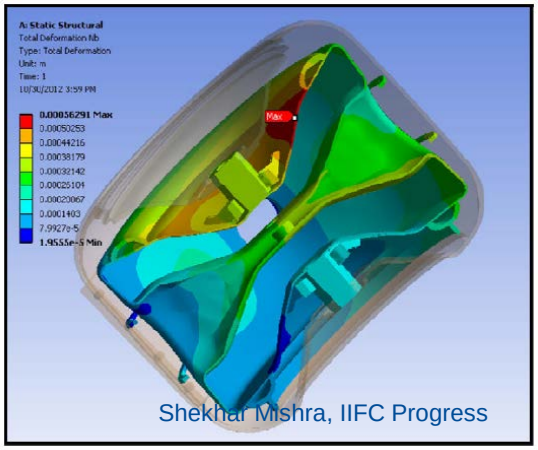

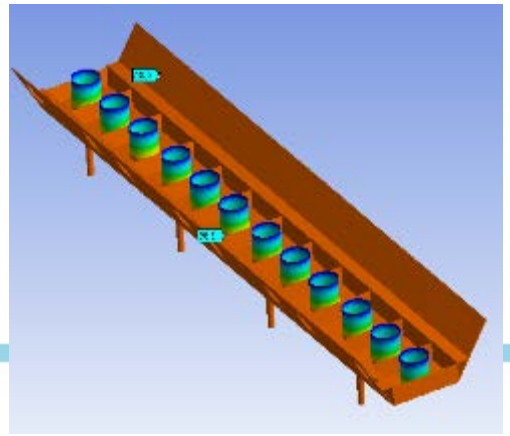

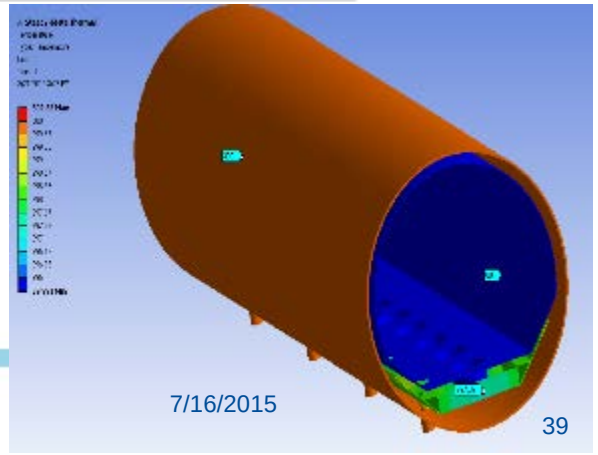

IIFC: System Test of SSR1 CM and RF Power with Beam

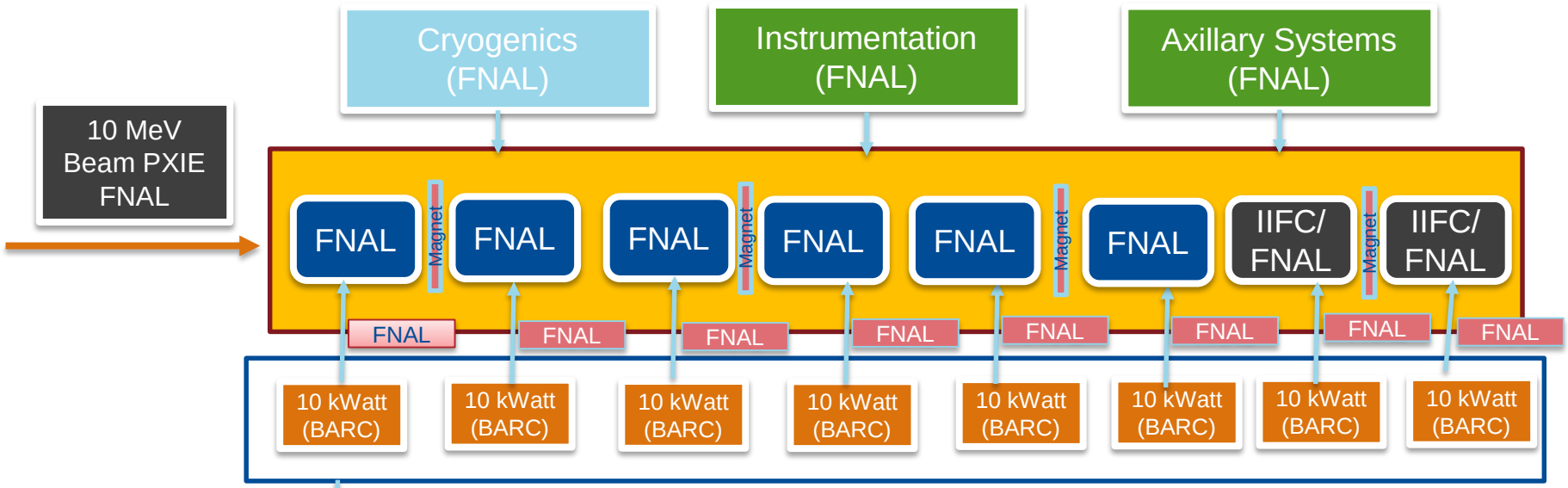

IIFC RF Protection (FNAL/BARC)

IIFC LLRF (FNAL/BARC)

Integration and Controls (FNAL)

Solid State RF Jan 18
LLRF/RF Protection Jan 18
Control System Jan 18
Cryogenic for SSR1 Jan 18
SSR1 CM March 18
Integration with CM July 18

Q3-CY2018
With Beam

IIFC β = 0.47: BARC & IUAC

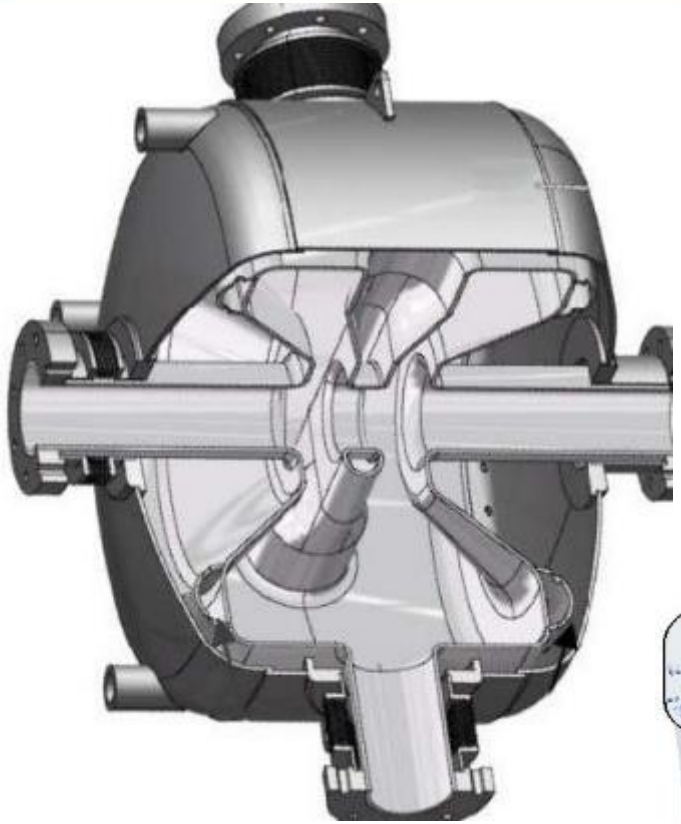

- **BARC has initiated SSR2 design and will fabricate 1st prototype in collaboration with IUAC.**
- **Investigating details of cavity fabrication, including E-beam facility**

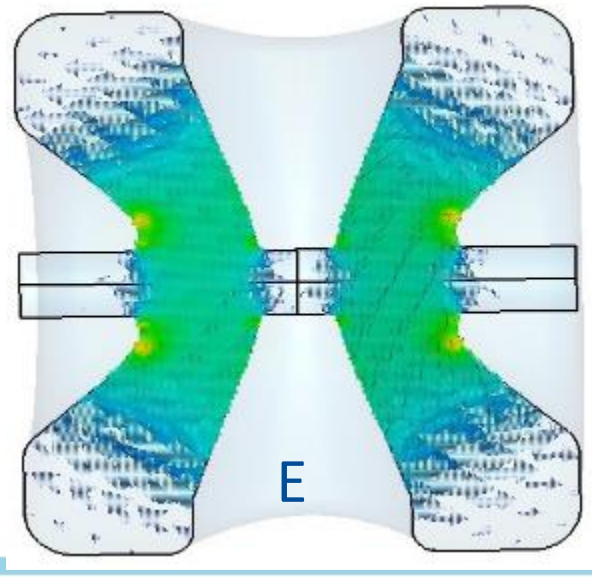

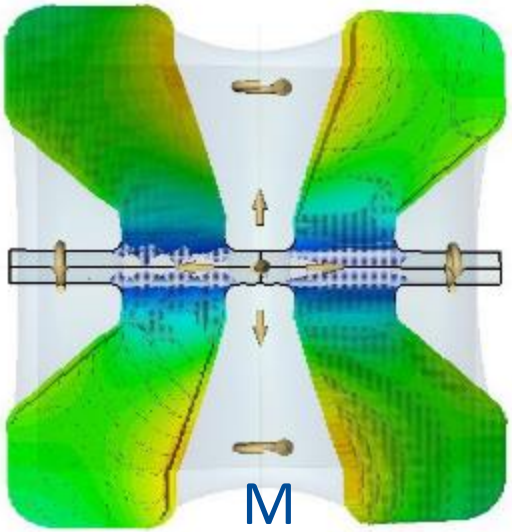

IIFC: 650 MHz β=0.61 Cavity

- **VECC has done a complete design of a 5-cell, β=0.61, cavity that meets the Functional Specification Requirements provided by Fermilab.**

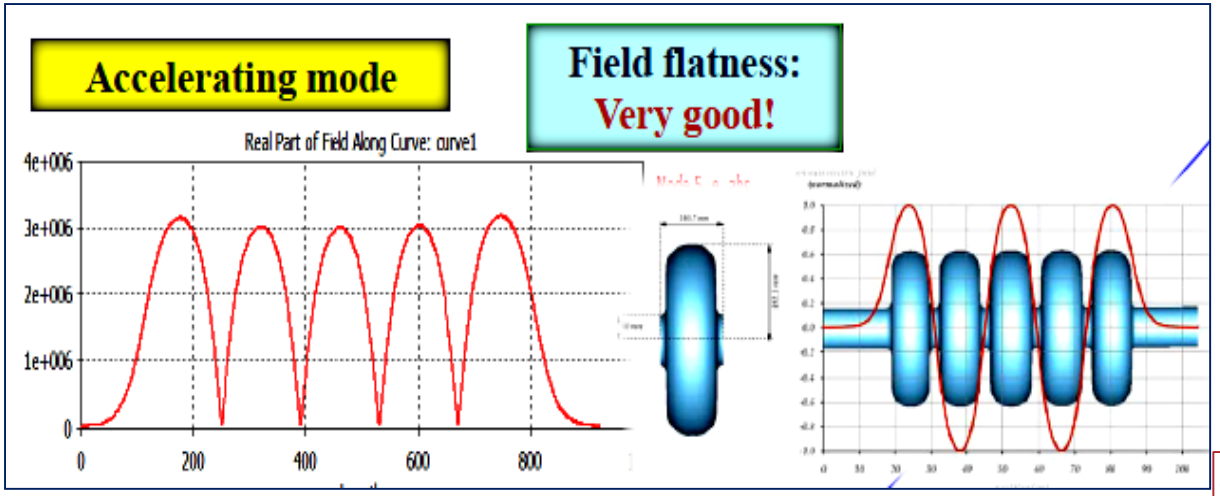

Nb Half Call

1-Cell Cavity to be welded at IUAC

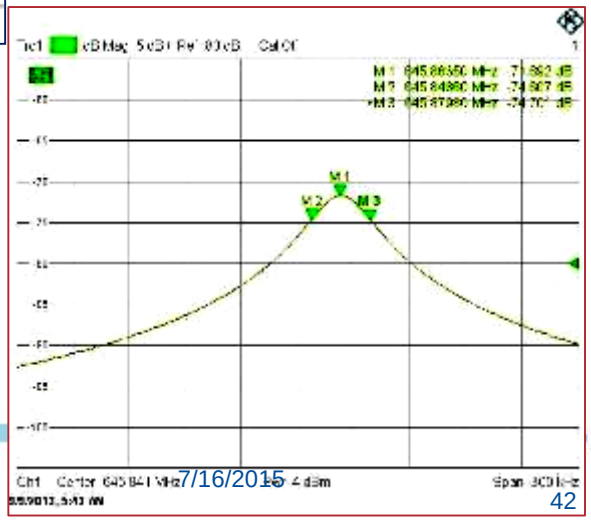

IIFC: Development of β = 0.61, 1-cell Nb cavity

- VECC has carried out a complete comparative design of β=0.61 5-cell cavity

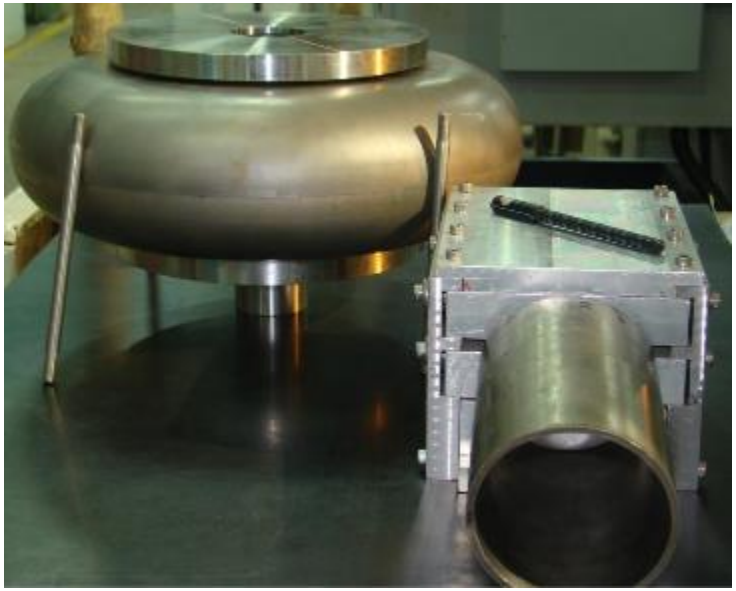

Niobium Half cells , beam pipes and necessary fixtures

- Welding of cavity is planned at IUAC
- Processing and testing at Fermilab

IIFC: SRF Infrastructure Development at RRCAT

IIFC: Vertical Test Stand

- **A Jointly design and Fabricated Vertical Test facility for RF characterization of SCRF cavities at 2 K has been commissioned at RRCAT.**
  - **A single-cell 1.3 GHz cavity has been successfully tested using the facility.**

Transfer of liquid helium in the VTS cryostat

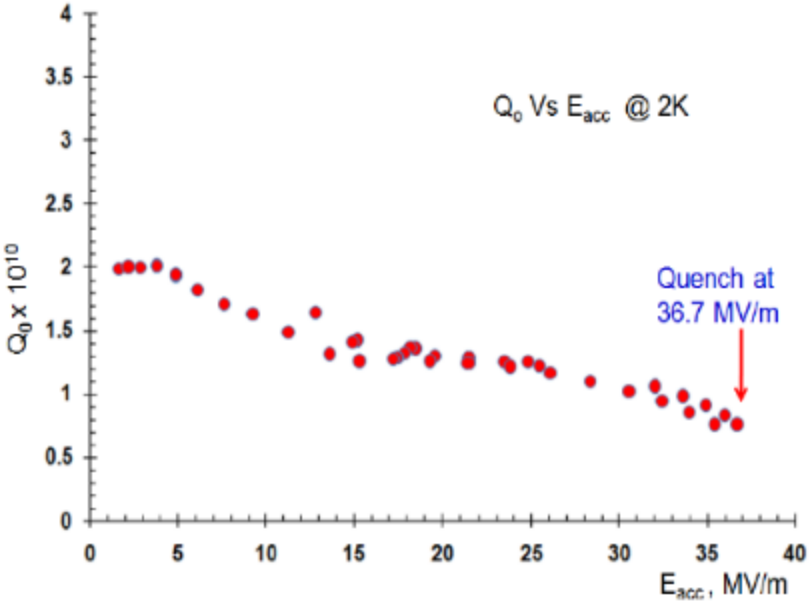

Testing of single-cell 1.3 GHz SCRF cavity in the VTS facility at RRCAT

IIFC: Cold test results of RRCAT 1.3 GHz, 1-cell cavities

Four 1.3 GHz single-cell SCRF cavities have been fabricated and tested under IIFC during 2009-11.

1.3 GHz Single-cell SCRF cavities

Processed and Tested at Fermilab

2 K Test results of the 1.3 GHz Single-cell SCRF cavities

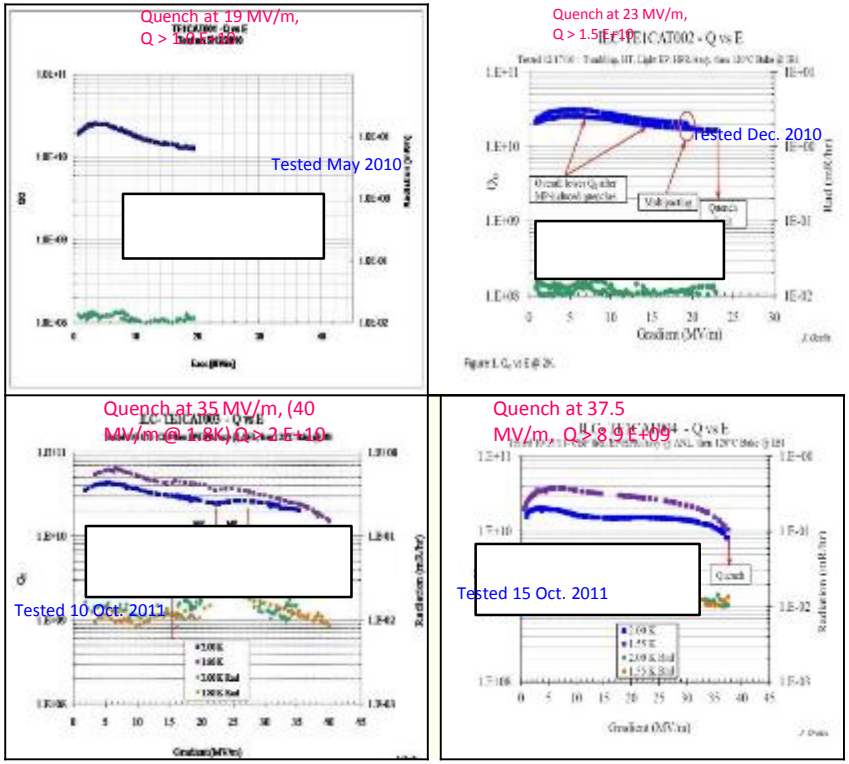

IIFC: VTS test results of 1.3 GHz Five-cell SCRF cavity

1.3 GHz five-cell cavity on vertical test stand at Fermilab

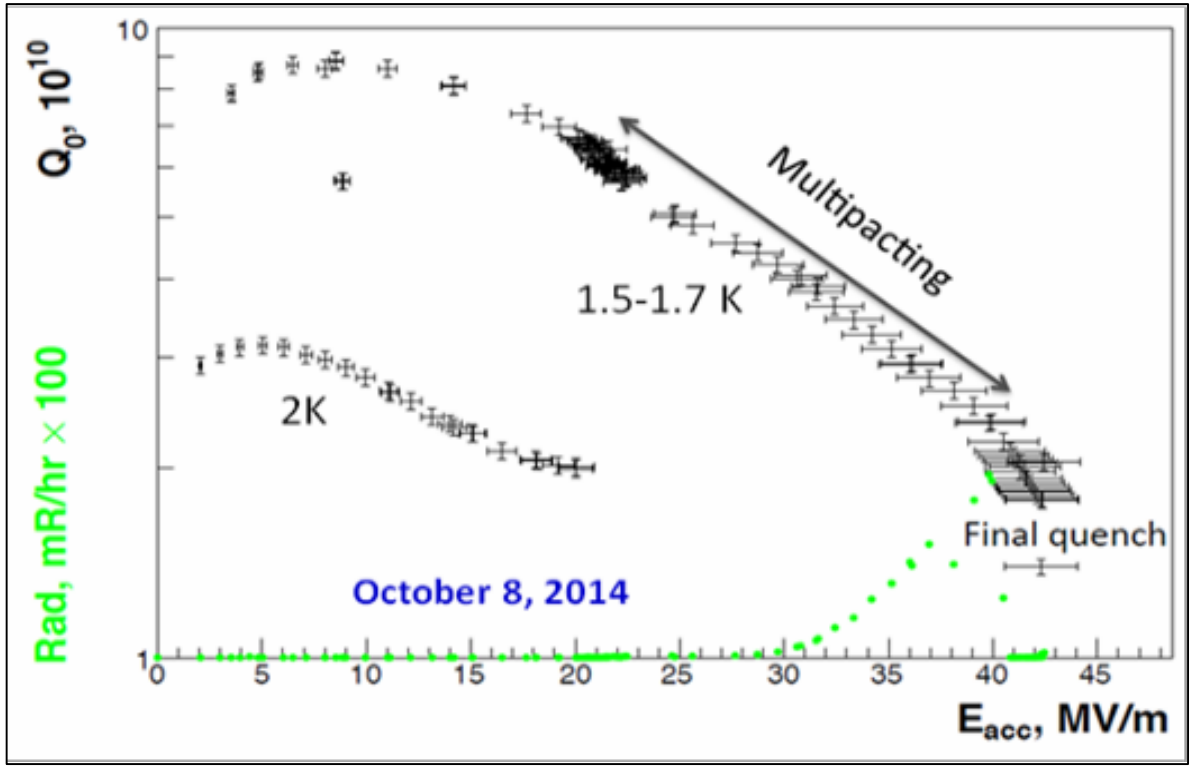

Q vs E_{acc} plot for TE5CAT006

Processed and Tested at Fermilab

The 1.3 GHz five-cell cavity was tested during October 2014.
The cavity achieved accelerating gradient of 20.3 MV/m at 2 K and 42 MV/m at 1.5-1.7 K with Q_0 of 2 x 10^{10}

650 MHz β=0.92 five-cell Cavity

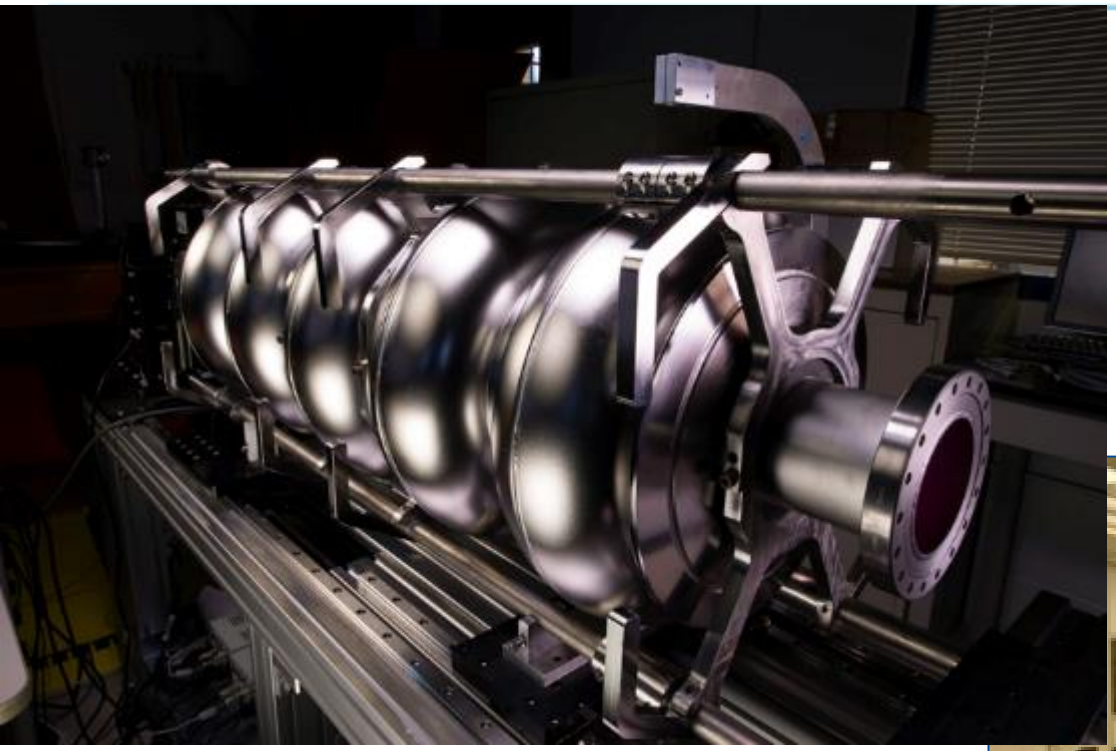

N Doping – small variation from standard ILC treatment

Example from FNAL 2/6 doping process:

- Bulk EP
- 800 C anneal for 2 hours in vacuum
- 2 minutes @ 800C nitrogen diffusion
- 800 C for 6 minutes in vacuum
- Vacuum cooling
- 5 microns EP

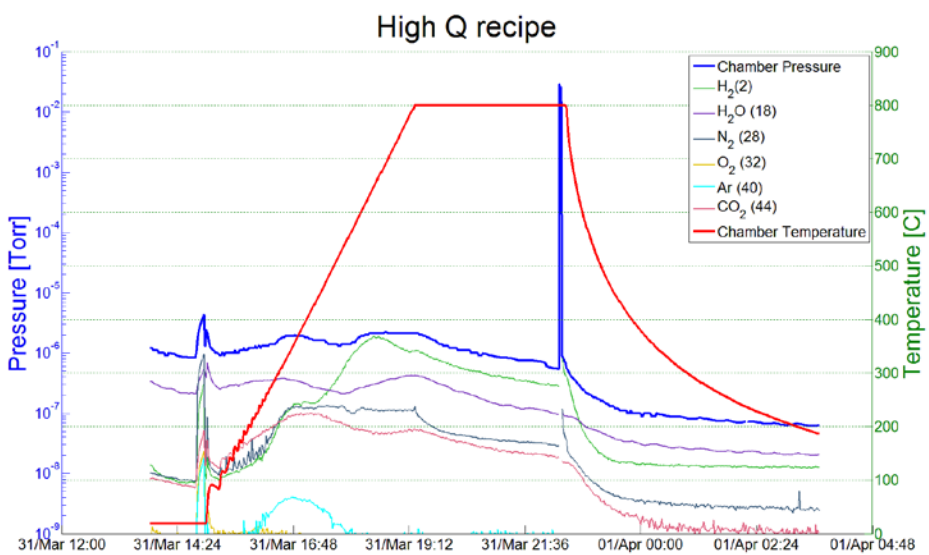

A. Grassellino et al, 2013 Supercond. Sci. Technol. **26** 102001 (Rapid Communication)

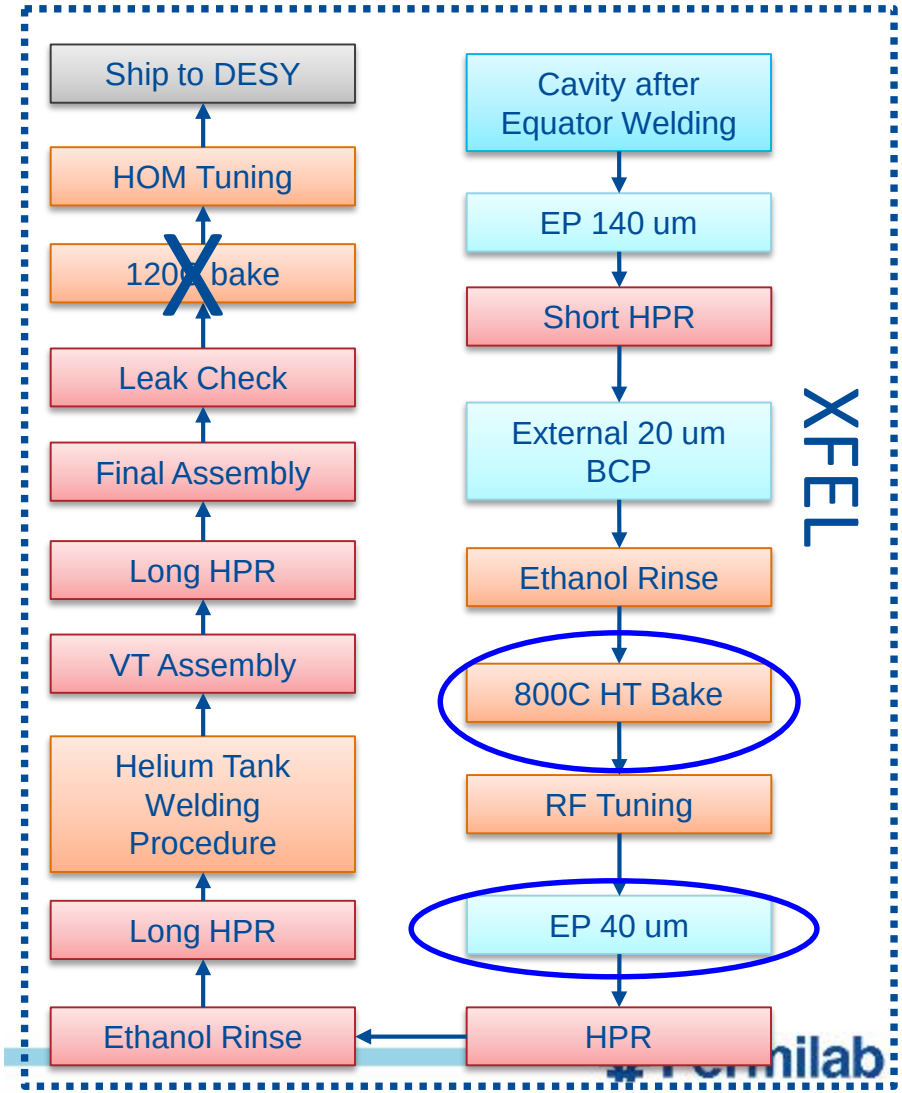

Results – highlights – 120C bake versus N doping
Q~ 7e10 at 2K, 17 MV/m – world record at this frequency!

Applying N doping to 650 MHz (beta=0.9) leads to Q x3 exceeding specs

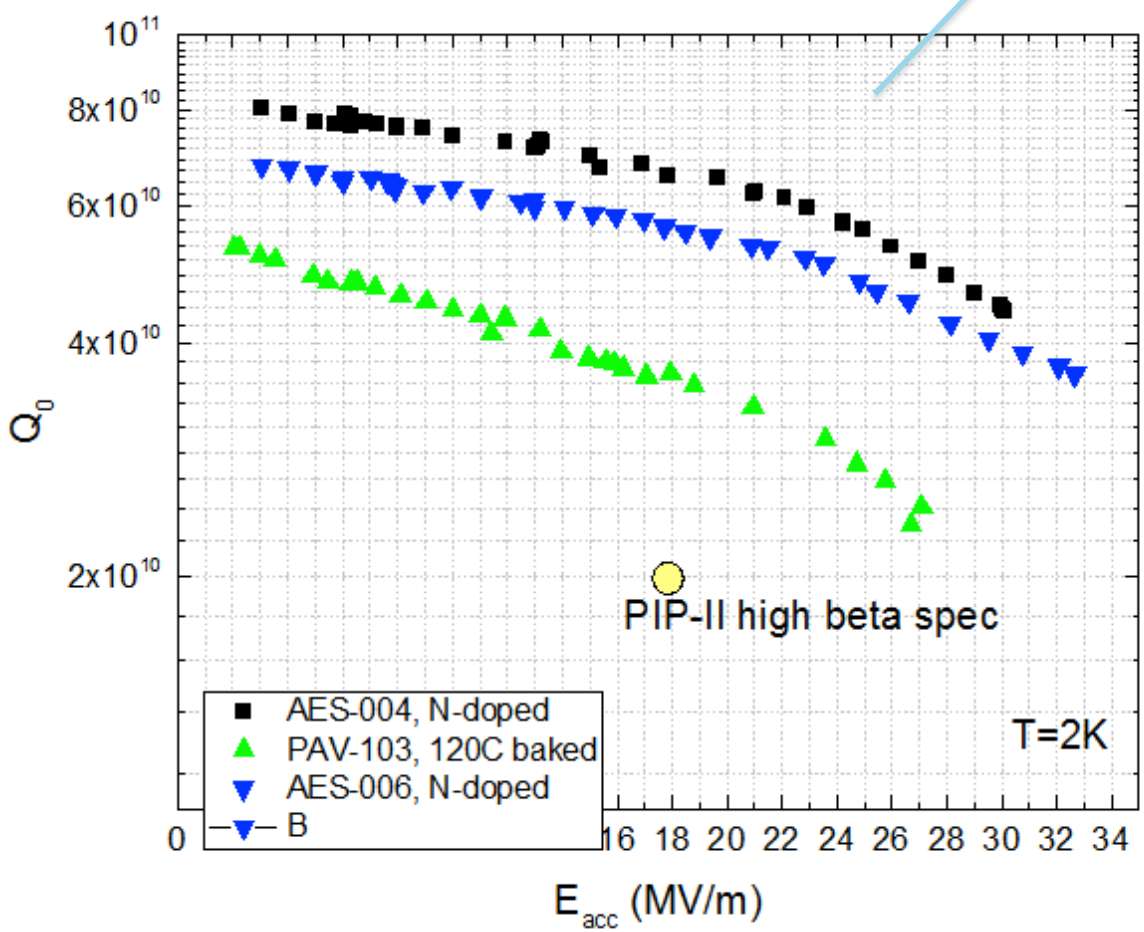

High duty factor operation (30%) may be possible even with the existing (limited) capacity cryoplant!

IIFC: Status of 650 MHz Beta=0.9 single-cell cavity

- RRCAT Fabricated one Nb HB (Beta=0.90) 650 MHz single-cell cavities with IUAC .
- Processed and tested at Fermilab

The 650 MHz (β=0.9) single cell SCRF cavity has achieved Eacc 19.3 MV/m with Q > 4E10 at 2K.

Cavity VTS mounting

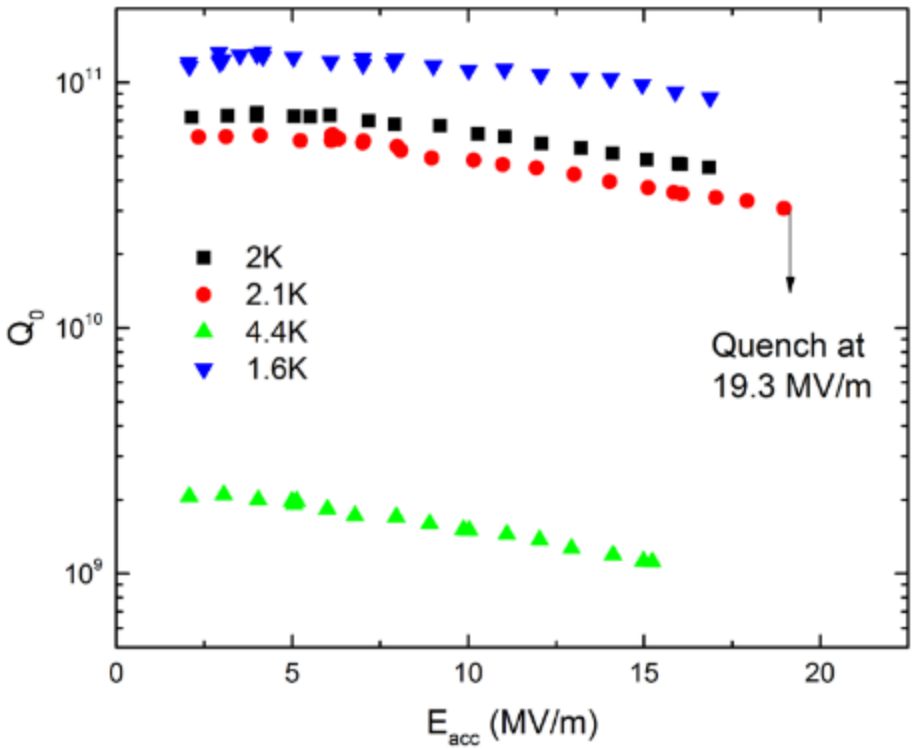

Q0 vs Eacc plot of Cavity

IIFC: Status of 650 MHz Beta=0.9 single-cell cavity

Second cavity was processed (EP~ 50 micron) at RRCAT and tested in Dec 2014.

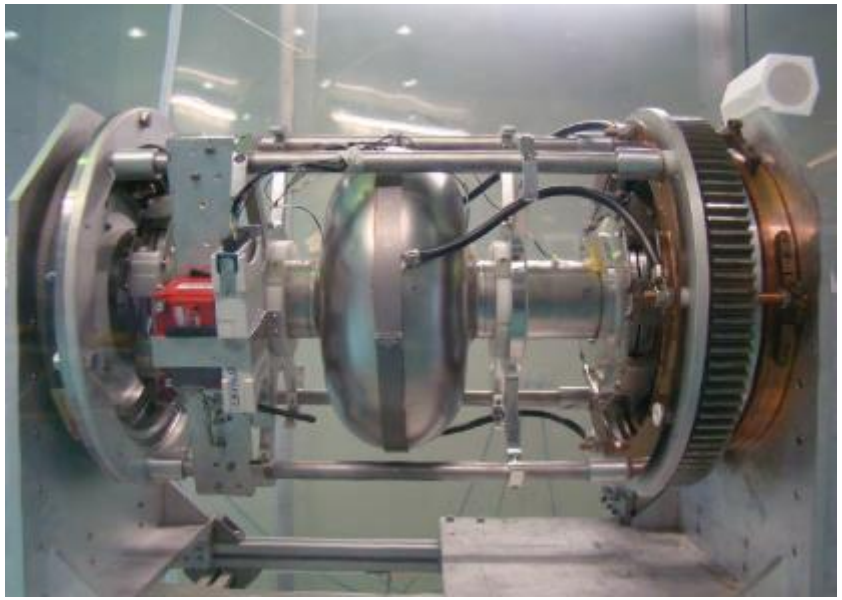

Electro-polishing of 650 MHz single-cell cavity

HPR of 650 MHz single-cell cavity

650 MHz single-cell cavity on VTS insert

IIFC: 650 MHz He Vessel

- **Two trial vessels of titanium, grade-2 (similar in shape & size for 650 MHz cavity) have been manufactured in industry by RRCAT to understand the fabrication process.**

Titanium vessels fabricated at M/s TITAN, Chennai

Preparation for Welding (back purging and trailing shield arrangement)

Welding in progress

- **The actual fabrication of helium vessel for 650 MHz cavity will be taken up once the design is finalized between Fermilab and RRCAT.**

IIFC: 650 MHz Cryomodule Design

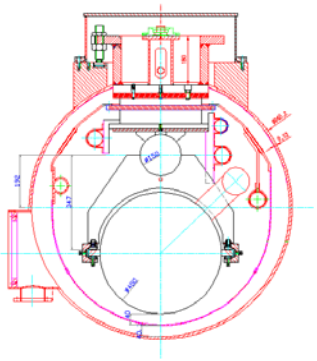

Possible Options & their evaluation

Goal :Use Popular T4CM Cryomodule design

-(Although cavity size is up by a factor of 2)

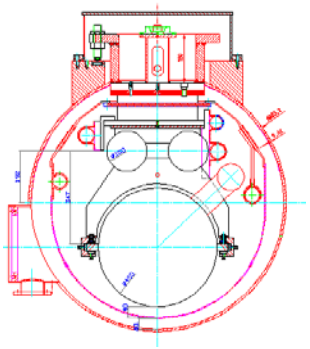

Option A- Single Pipe Support

Option B- Support on two pipes

Evaluation Based on:

- Static heat leaks (approximations)
- Stiffness of the cavity support system (approx)
- Availability of pipes
- General Mech. Engineering issues

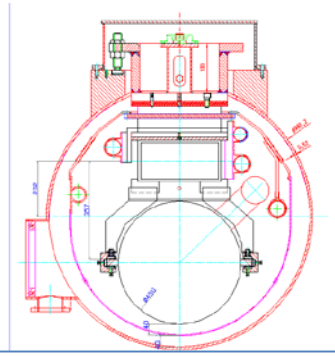

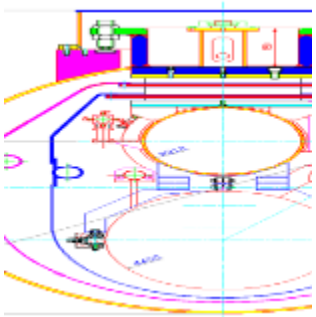

Option C- Rectangular Duct support

Option D- Finalized 200 mm pipe config.

Fermilab to initiate a new design with SSR CM concept

RRCAT: 650 MHz Cryomodule

- **Design of cryomodule subsystems was started from scratch. 5 Initial configurations were proposed.**
  - **Fermilab selected Tesla type configuration.**
  - **3-D model of 650 MHz cryomodule completed.**
- **Design of vacuum vessel, cavity support system, and thermal shield completed and tested in CM Test Rig**

Cryomodule component test rig

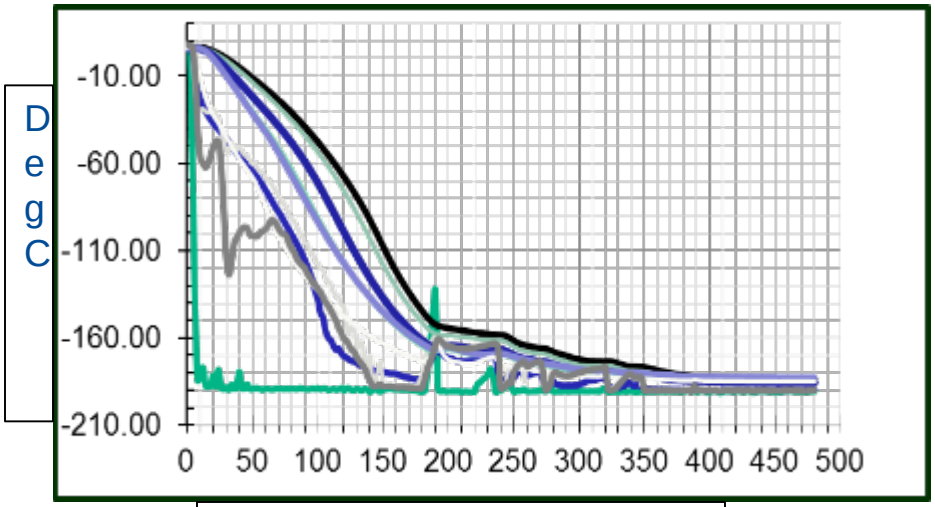

Experiment result of thermal shield cool down

IIFC: Horizontal Test Stand

- **HTS-2 is being jointly designed to individually test two fully dressed 650 MHz cavities in single cycle under conditions similar to those in a cryomodule.**
  - **Design and 3-D model has been completed.**
  - **Design report on sub-systems finished.**
    - **A final joint design review is expected by March 2014.**
- **RRCAT will fabricate this for Fermilab and India DAE**

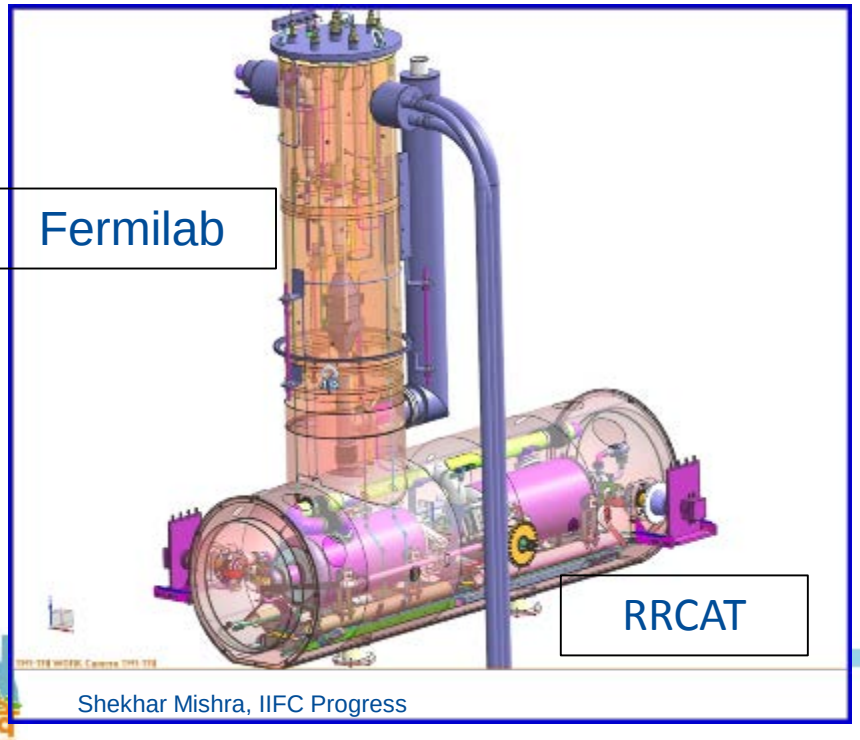

- **Status:**
  - **Prototype of cryogenic support post completed and tested in CCTR.**
  - **Scaled-down frame bridge prototype completed.**
    - **It will be tested in CCTR by March 2104.**
  - **Prototype of thermal shield completed.**
    - **Along with frame bridge and rolling cart it will be tested shortly in cryomodule component test rig (CCTR).**

IIFC: Horizontal Test Stand

Q2-CY2017

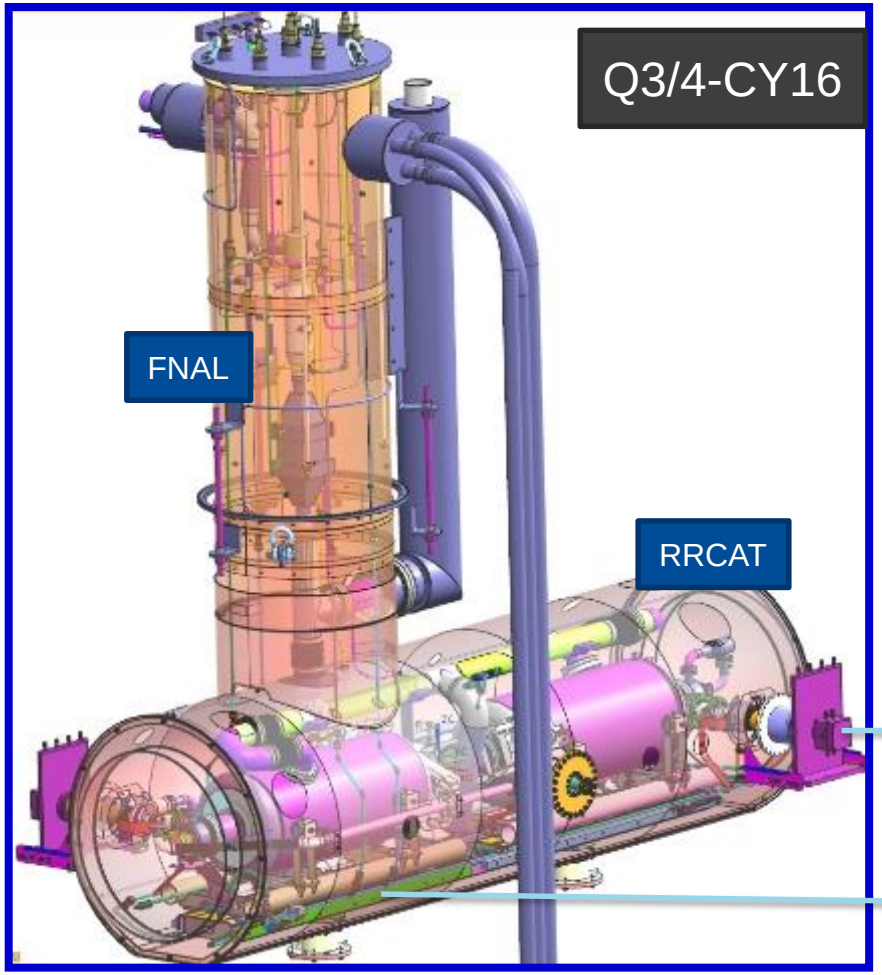

Two 30 kWatt Units (RRCAT)

FNAL

FNAL

Cryostat at Fermilab July 16
Cryogenic for HTS July 16
Two 30kWatt RF July 16
LLRF/RF Protection July 16
Control System July 16
Integration with cryostat Oct 16
Test of 1st Dressed Cavity Jan 17

IIFC RF Protection (FNAL/BARC)

LLRF (FNAL/BARC)

Integration and Controls (FNAL)

IIFC: Development of 1.3 GHz Cryomodule Test Stand

Establishing procedure for large scale cryogenic component fabrication in DAE

Critical for LCLS-II

Fermilab R&D Linac

Cryogenics at Fermilab

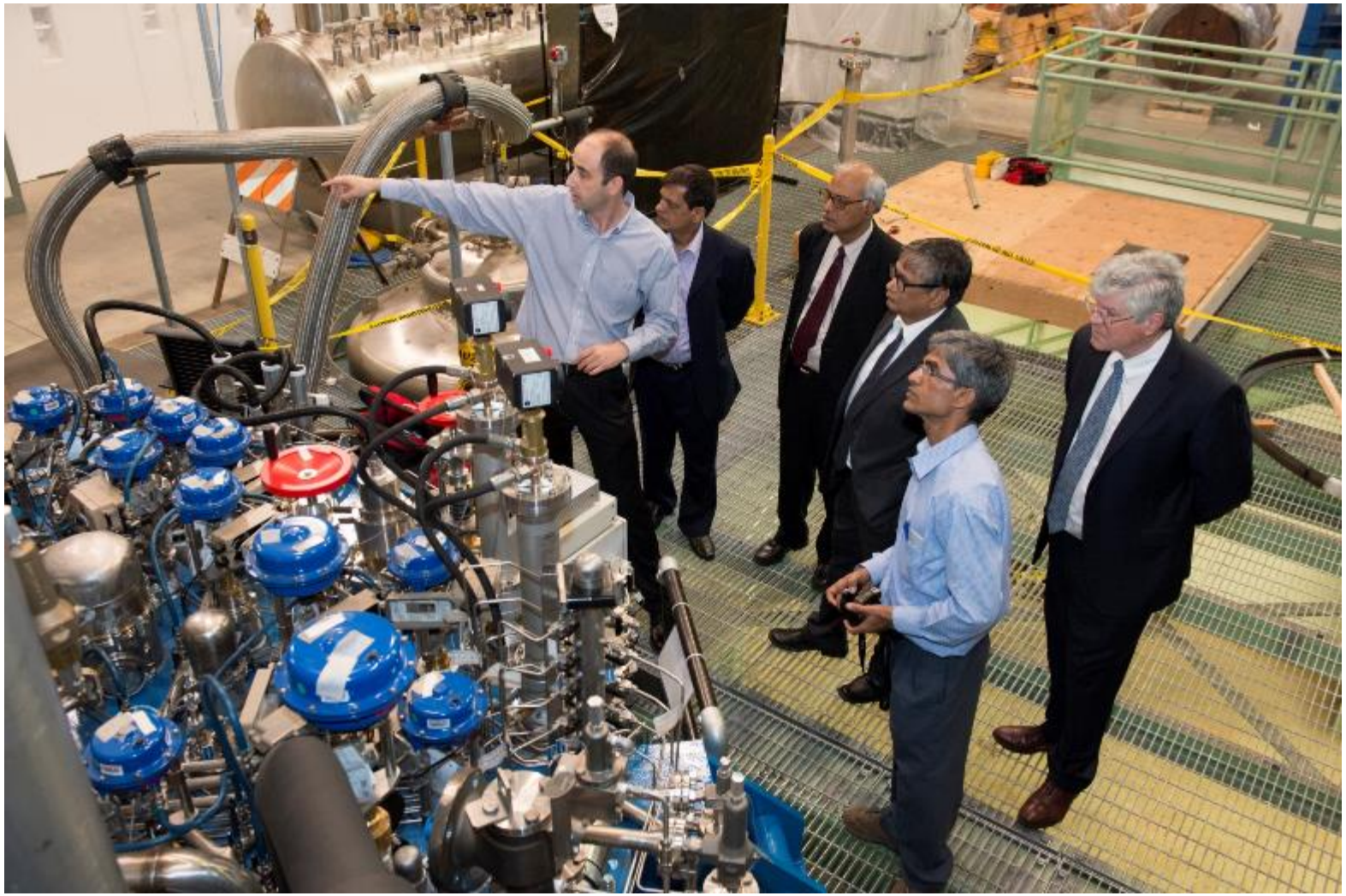

IIFC: 650 MHz Cryomodule Test Stand

- Design of the 650 MHz CM test stand will start after the completing the 1.3 GHz test stand in summer of 2015.
- 650 CM is a closed system with a cryo-distribution in the middle, it is expected to be a relatively easier design.
- Goal: Dec 2018

BARC: 325 MHz, 3 kW RF at Fermilab

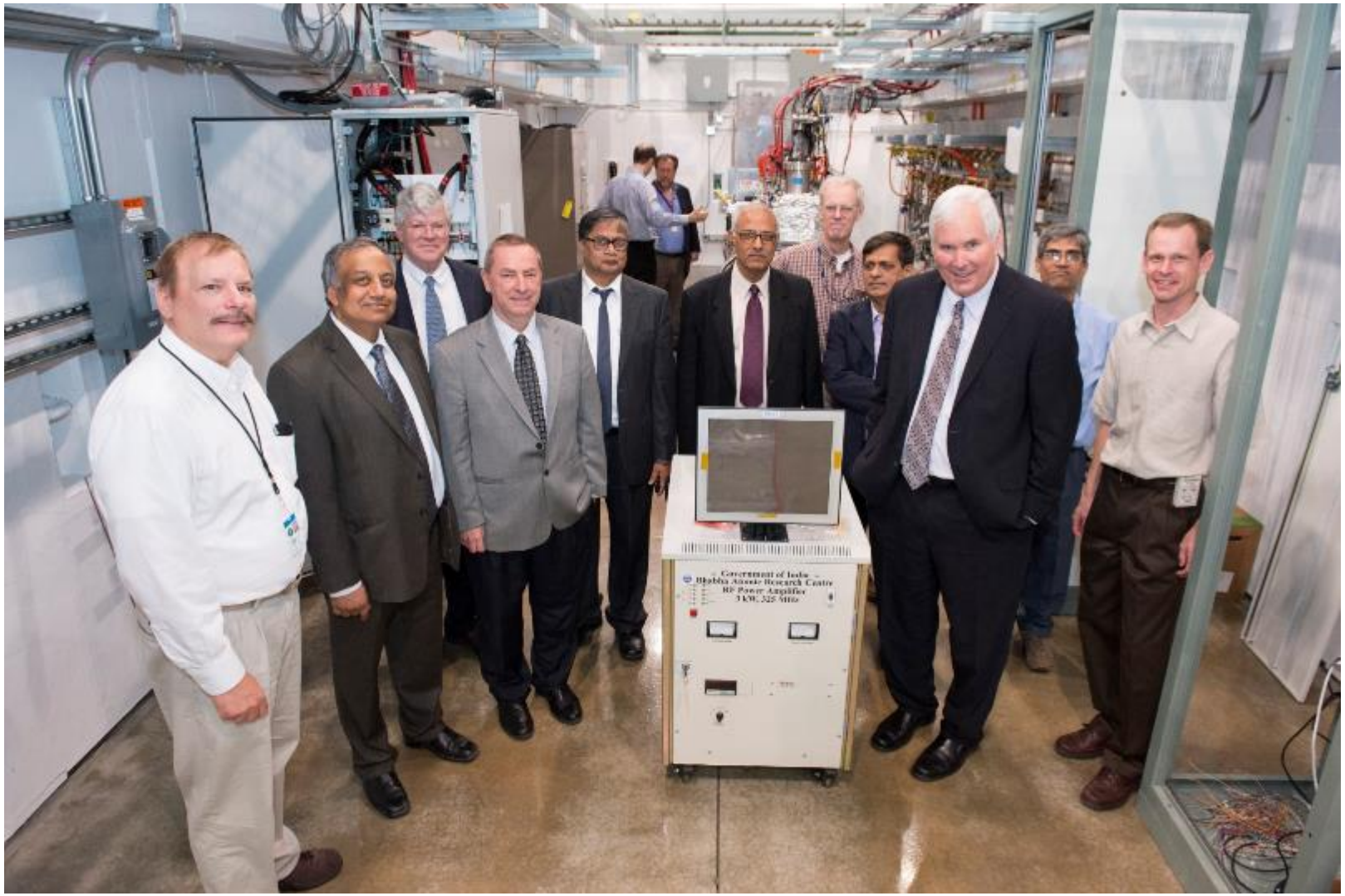

BARC: 325 MHz Solid State RF Power Development

Display of Calorimetric measurement of RF Power

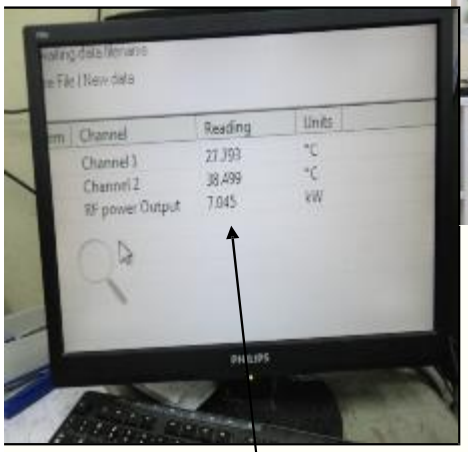

Sensor data of Calorimetric measurement of RF Power

RF Power Waveform at 7 kW on spectrum analyzer

Overall conversion efficiency: 66.3%

3 kW system at Fermilab (Need Repair)

RRCAT: 650 MHz Solid State RF Power Development

- Design and development of 15 kW, 650 MHz solid state RF power amplifier is completed.
- The high power is obtained by using several 500 W basic RF power modules.
- It is housed in a single euro rack with 40 compact amplifier modules, 40 way power divider and 40 way power combiner.

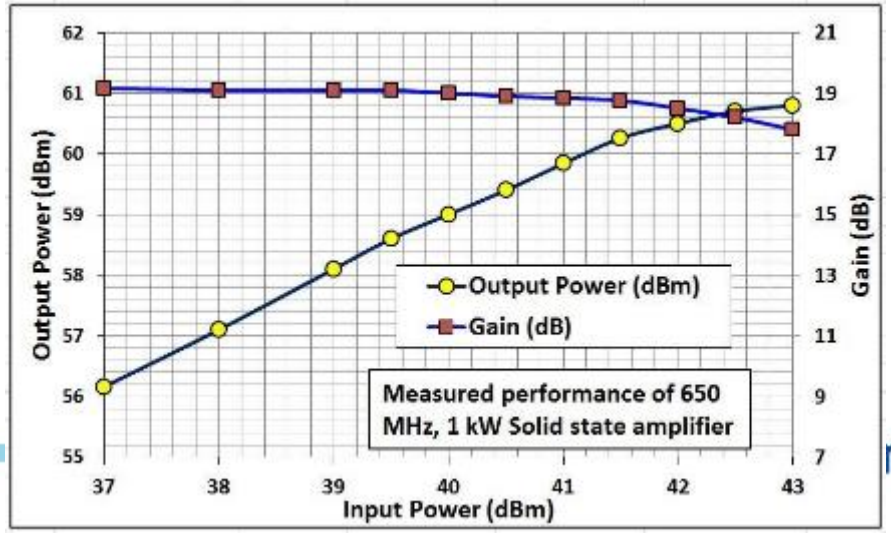

IIFC: RF Protection System: BARC & Fermilab

- **An upgraded RF Protection system is jointly being developed by BARC and Fermilab.**

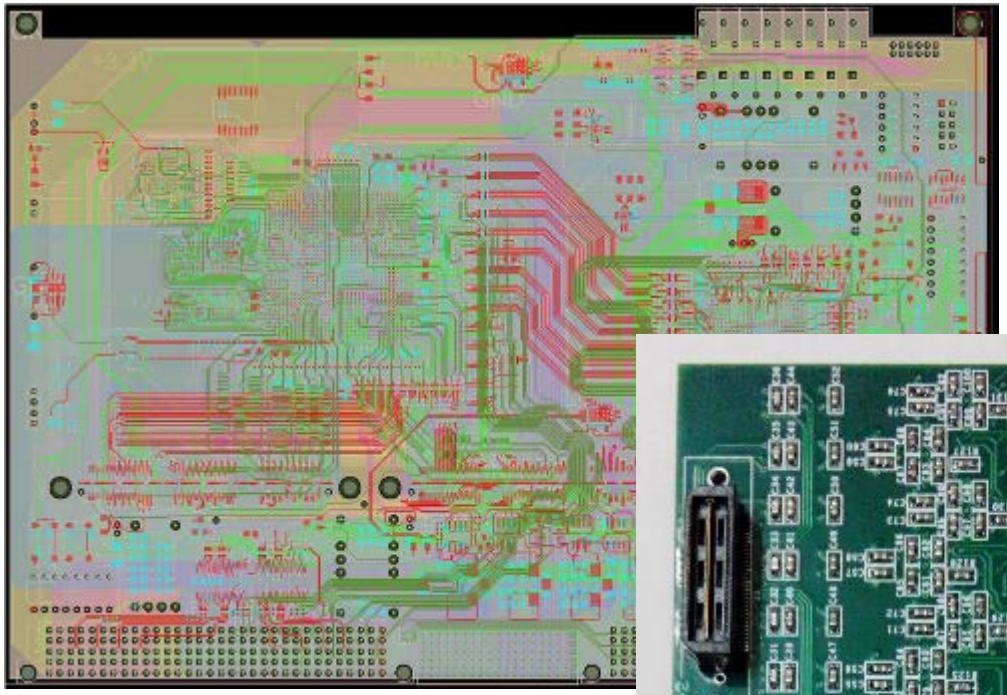

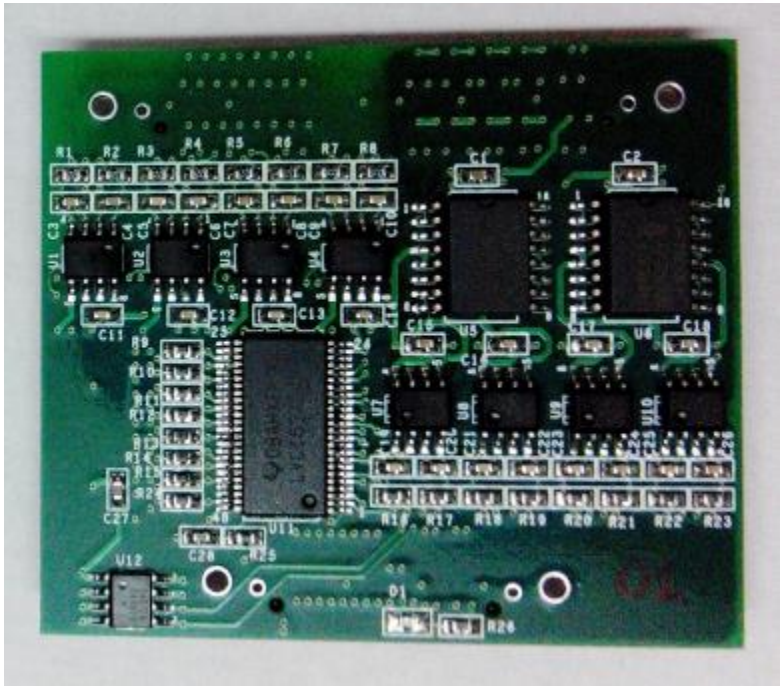

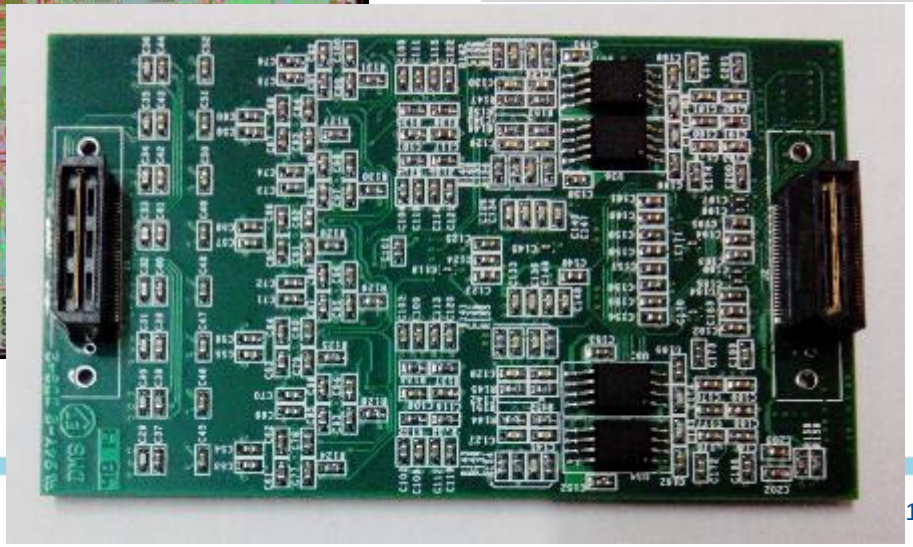

IIFC: RF Protection Interlock System - Status

1. System control Board designed and fabricated, presently under testing

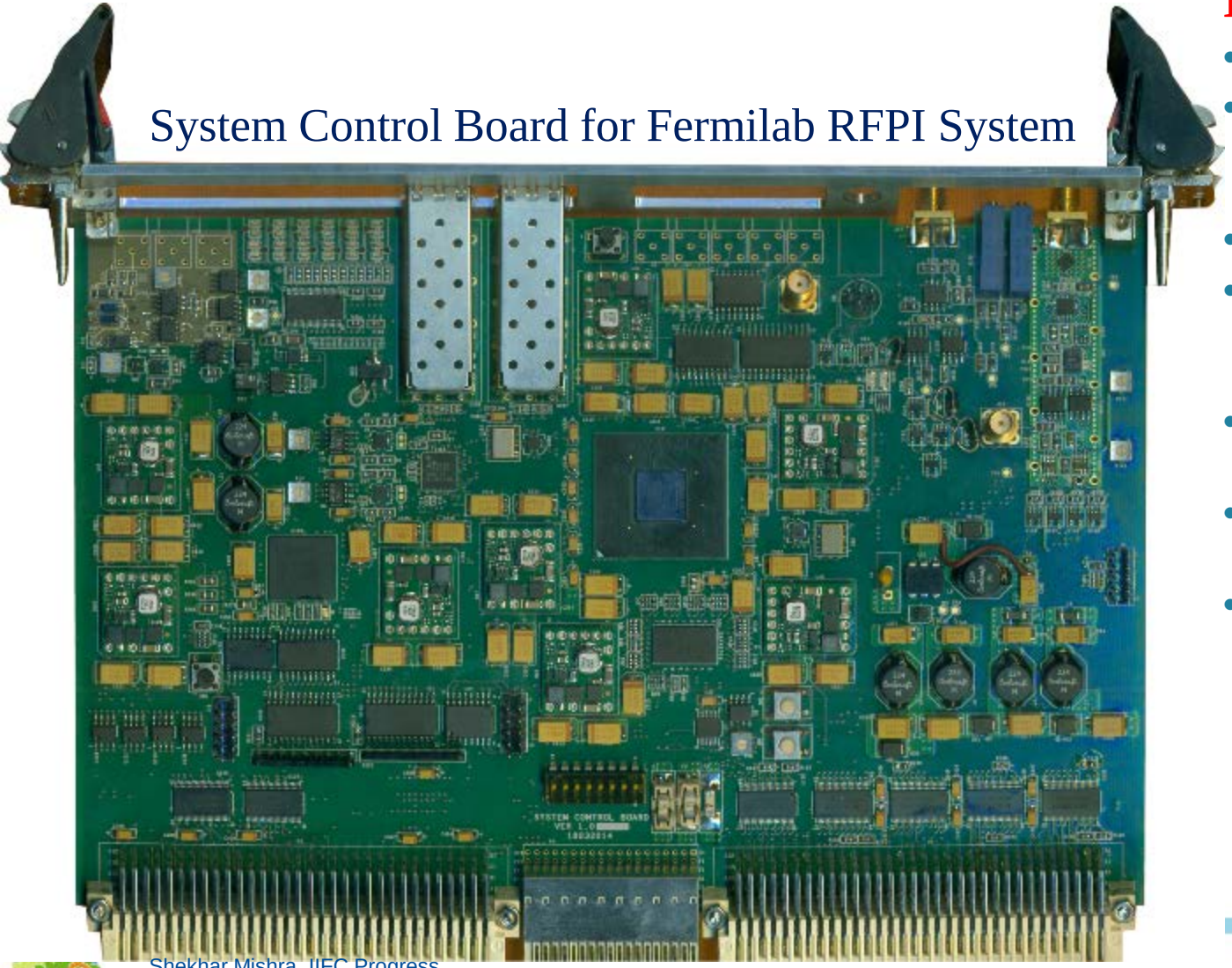

System Control Board for Fermilab RFPI System

Features:

- **VME-64x Interface**
- **2 High Speed Serial transceivers @ 3.125 GbPS**
- **4x PCIe interface**
- **One channel for Photo Multiplier Tube monitoring**
- **One channel for RF leakage Monitoring**
- **Four channel 80MSPS 14 bit ADC**
- **256MB DDR3 RAM for 1 sec circular buffer on each channel**

Indian Industry

Visit to Electronics Corporation of India Ltd.

Solid State RF and Electronics could be built by ECIL

IIFC: Integrated Test of HB650 Cryomodule and RF Power

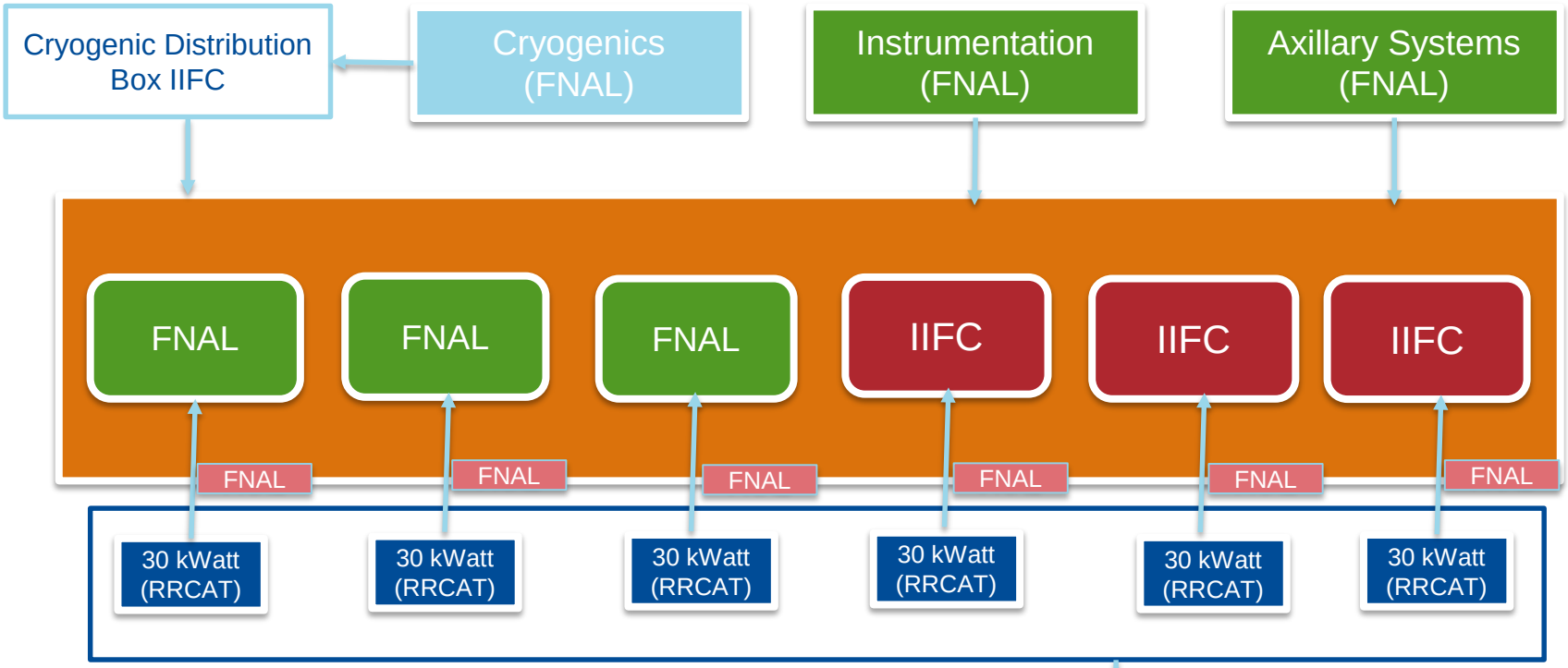

Q4-CY2018 CM Cold With RF

IIFC LLRF (FNAL/BARC)

IIFC RF Protection (FNAL/BARC)

Integration and Controls (FNAL)

Solid State RF April 18
LLRF/RF Protection April 18
Control System April 18
Cryogenic for April 18
Integration without CM July 18
HB650 CM Sept 18

BARC: MEBT Magnets

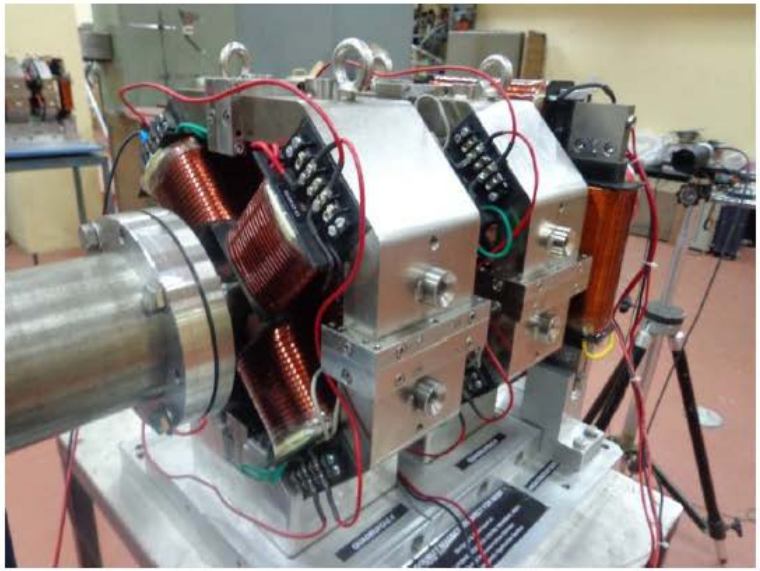

Doublet assembly at FOTIA beam line in BARC at 2.5 MeV Proton beam

Slight steering of beam due to offset between magnetic axis and beam axis

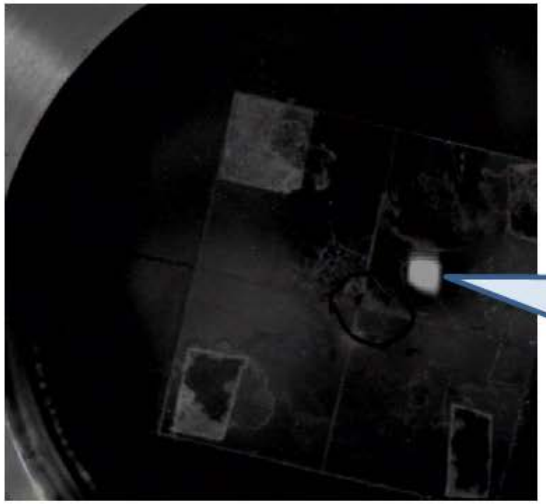

Magnets un-energized

Unfocused beam

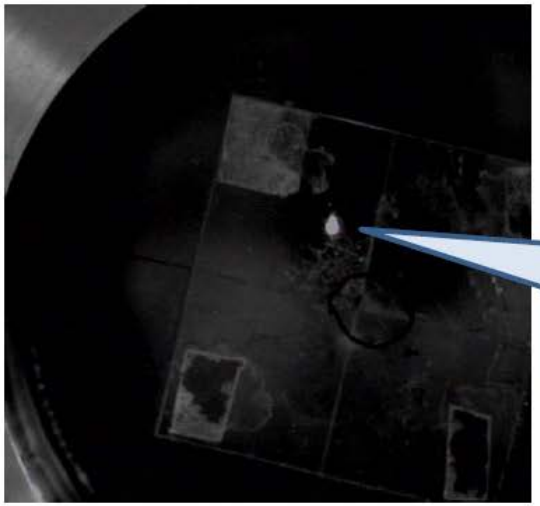

Doublet magnets energized

Focused beam

BARC Magnet at Fermilab

DAE and PXIE

- Collaborating DAE laboratories are already working on the Research, Design and Development of almost all hardware of the High Intensity Superconducting Proton Accelerator.
- BARC has also proposed to develop similar 50 MeV linac.
- IIFC is already working on the following that would be used for PXIE
  - MEBT Magnets
  - SSR1 Cavity and CM
  - 325 MHz Solid State RF Amplifiers,
  - RF Protection system
  - LLRF System
- DAE has proposed to send scientific and engineering staff to participate in PXIE construction, installation and commissioning.
  - Take a leading role in jointly developing an integrated SSR1 and HB650 CM (Cavity to RF).
  - Test SSR1 with beam

Indian Strategy on PIP-II

- **Annex I provides framework for Indian participation in R&D and construction phases**
- **Current focus is on defining R&D deliverables, under assumption these will be aligned with construction deliverables**
  - **IIFC is jointly working to retire all the critical PIP-II R&D by CY2018.**
- **Joint DAE-DOE review at end of R&D phase to provide go ahead for construction deliverables.**
  - **Indian Institutions to establish infrastructure and industry**
- **Team integration: Six Indian engineers are coming to Fermilab this summer for 2+ year residencies**

Overall IIFC R&D Schedule

R&D Phase Major Milestones	1/1/2015	4/1/2015	7/1/2015	10/1/2015	1/1/2016	4/1/2016	7/1/2016	10/1/2016	1/1/2017	4/1/2017	7/1/2017	10/1/2017	1/1/2018	4/1/2018	7/1/2018	10/1/2018
325 MHz SSR1 Cavity (IUAC)	IUAC (2)															
Spoke Resonator Cryomodule Design and Prototype (VECC/Fermilab)	VECC															
325 MHz SSR1 cavity (Dressed Cavity)										IUAC/VECC(2)				IUAC/VECC(2)		
325 MHz, SSR2 Cavity								BARC(2)			BARC(2)					
325 MHz, SSR2 Cavity (Dressed Cavity)																BARC(2)
650 MHz 1-cell, beta = 0.6 Cavity				VECC(1)												
5-cell, 650 MHz, beta = 0.6 Cavity							VECC(1)						VECC(1)			
5-Cell, 650 MHz, beta = 0.6 Cavity (dressed and Horizontally Tested)												VECC(1)				VECC(1)
650 MHz 1-cell, beta = 0.92 Cavity	RRCAT(1)															
650 MHz 5-cell, beta = 0.92 Cavity							RRCAT(2)				RRCAT(2)					
5-Cell, 650 MHz, beta = 0.92 Cavity (Dressed and Horizontally Testes)											RRCAT(2)				RRCAT(2)	
650 MHz Cryomodule Design								RRCAT								
325 MHz, 3 KW Solid State RF Power	BARC (1)															
One 325 MHz, 10 KW Solid State RF Power		BARC (1)									BARC(2)	BARC(4)	BARC(4)			
One 650 MHz, 10 KW Solid State RF Power	RRCAT(1)															
One 650 MHz, 30 KW Solid State RF Power					RRCAT(1)			RRCAT(6)				RRCAT(8)				
Two Cavities Horizontal Test Stand (RRCAT/Fermiab)	Design Finished	Procure						RRCAT(1)								
Low Level RF System								BARC(1)					BARC(1)		BARC(1)	
RF Protection Interlock System								BARC(1)					BARC(1)		BARC(1)	
1300 MHz Cryomodule Test Stand		BARC (1)														
650 MHz Cryomodule Test Facility																BARC

Concludes all the critical R&D for the SRF Linac

LBNF-DUNE Overview

- LBNF is a DOE/Fermilab hosted project with international participation.
- Major partners include CERN and SURF.

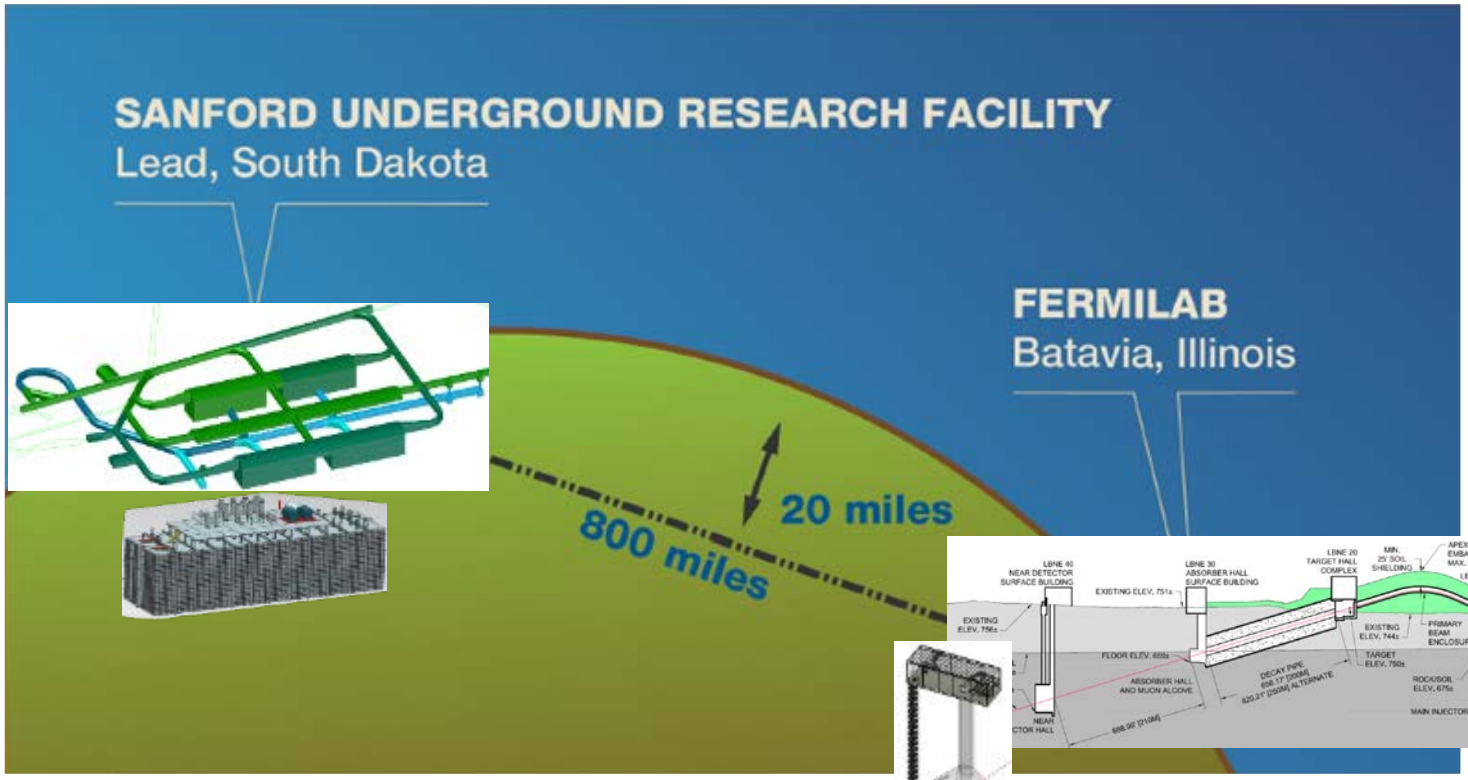

Far Detector: Steel-Frame Cryostat

Inner dimension (liquid+gas):

- **L = 62.00 m**
- **W = 15.10 m**
- **H = 14.00 m**

LAr = 17'432 tons (95% liquid)

Design is being developed to accommodate both single- and dual-phase detectors.

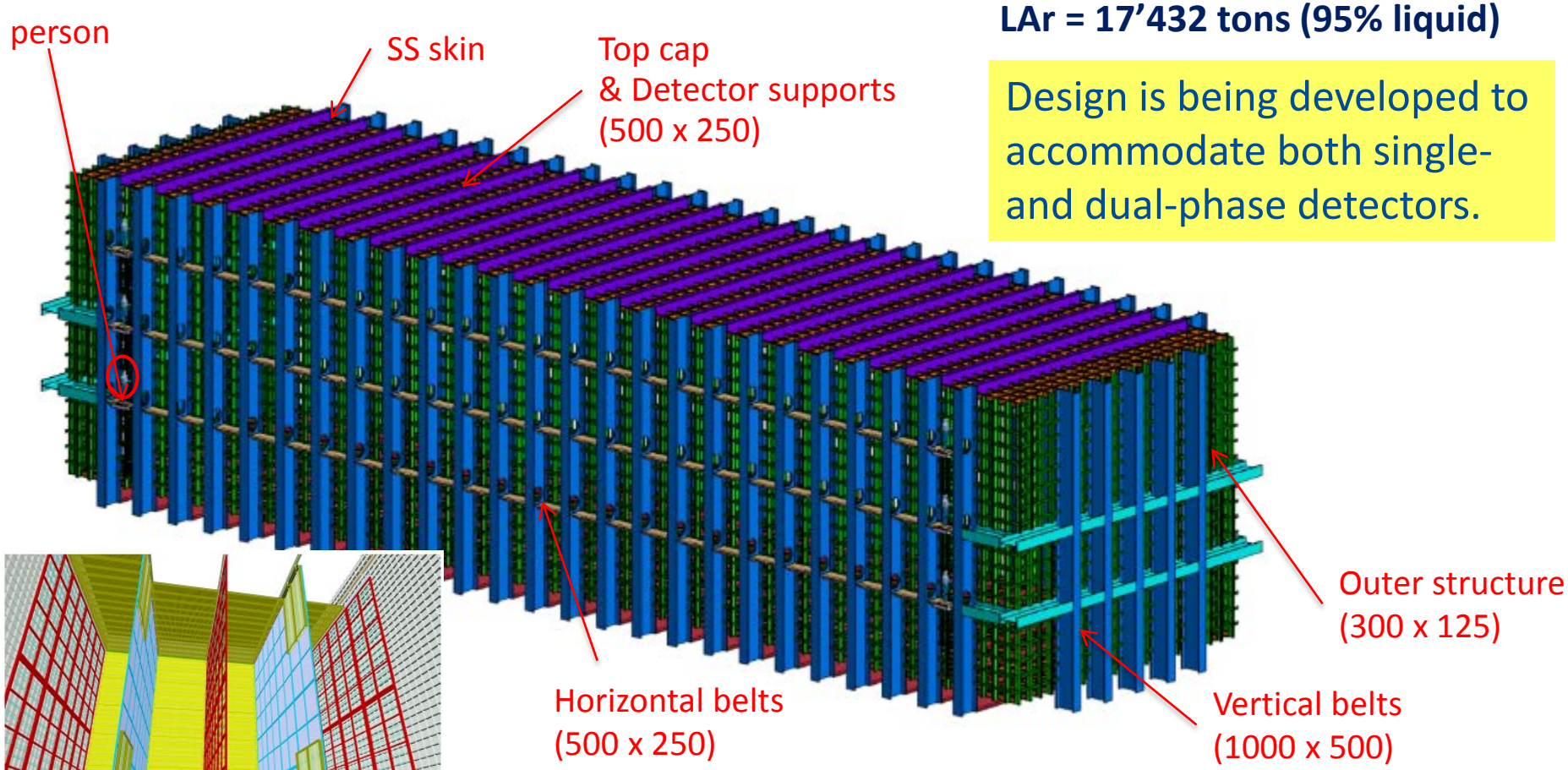

~400,000 Channels of Electronics

IIFC: DUNE-ND Detector

- The details of how the collaboration will develop DUNE-ND is under discussion.
  - DOE-DAE-DST-Fermilab-India Institutions
- Major Subsystems with Indian expertise
  - Straw Tube
  - Muon ID
  - ECAL
  - Magnet
  - Instrumentation and DAQ
- Proposed Schedule
  - Conceptual Design CY15
  - Preliminary Design CY 16
  - Final Design and Prototype CY17
  - Infrastructure Development CY16-18
  - Prototype Construction CY16-18

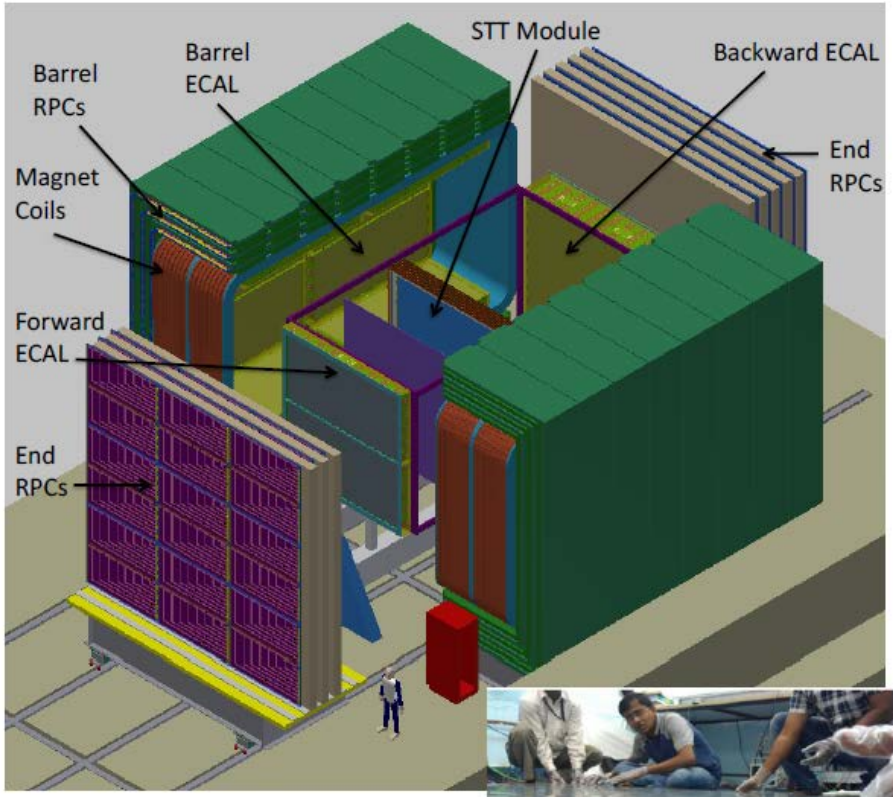

IIFC – νP Collaboration

- Eight Indian Institutions have joined the Fermilab Neutrino Physics Program.
  - MINOS, MINOS+
  - NOvA
  - LBNF/DUNE
- We are expecting several Ph.D. students from India under this program.
  - 1st student graduated
- This collaboration is growing
  - Indian Infrastructure Development
  - We continue to include more institutions

DUNE

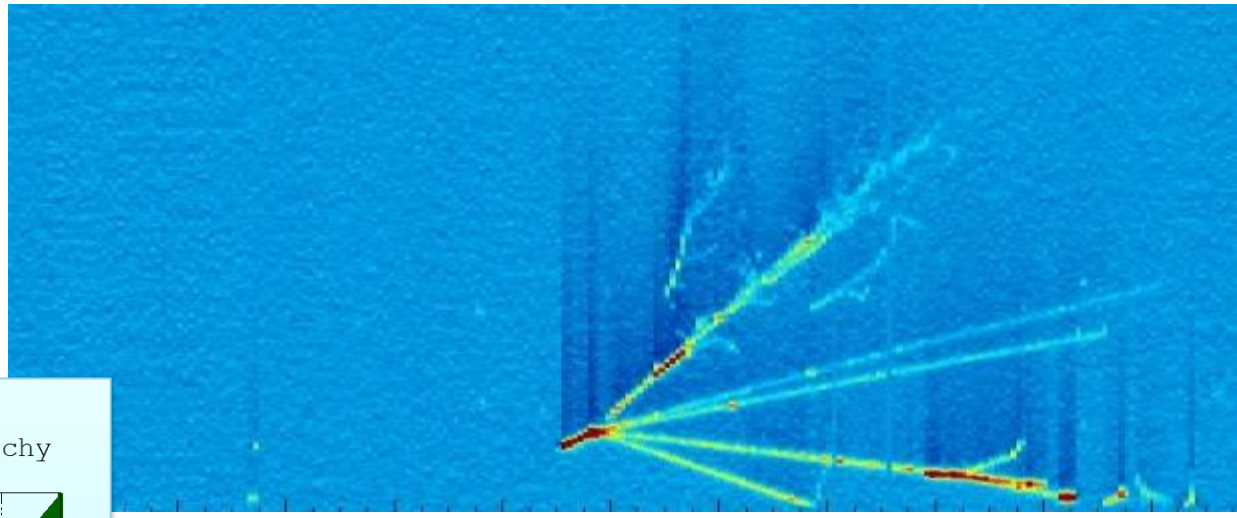

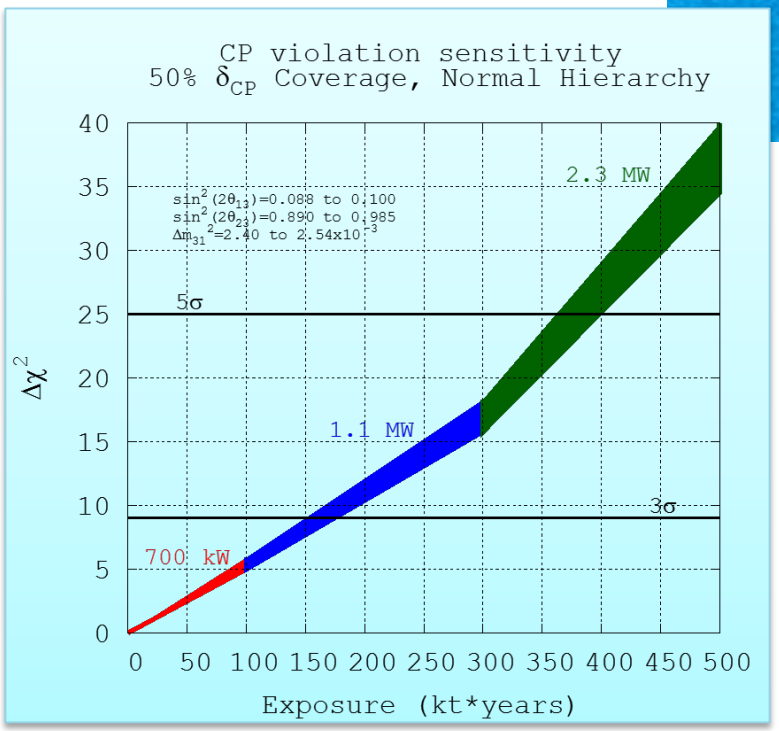
CP violation sensitivity
50% δ_{CP} Coverage, Normal Hierarchy
$\sin^2(2\theta_{13})$=0.088 to 0.100
$\sin^2(2\theta_{23})$=0.890 to 0.985
Δm_{31}^2=2.40 to 2.54x10^{-3}
2.3 MW
1.1 MW
700 kW
5σ
3σ
$\Delta\chi^2$
0 5 10 15 20 25 30 35 40
0 50 100 150 200 250 300 350 400 450 500
Exposure (kt*years)

Panjab University: STT Prototype

- Straw Chamber Received from Dubna operating at PU
  - Experience
- Purchased 50 Kapton straws for R&D
- Establishing infrastructure for fabrication
- Getting ready to fabricate a prototype STT, summer 2015

VECC: RPC Prototype

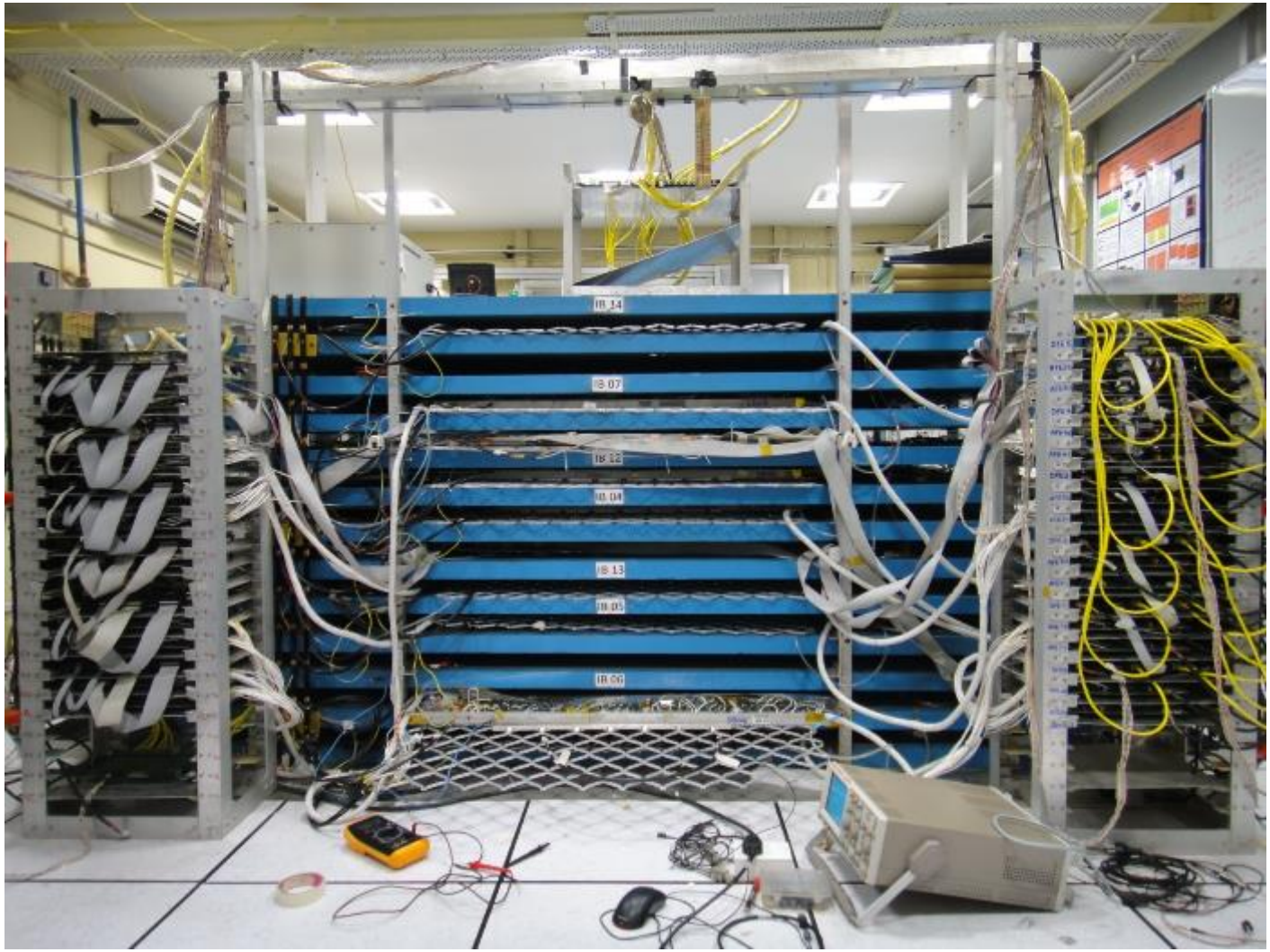

IIT-G: Computing Infrastructure

- Supported by DAE-DST Apex grant for the IIFC-nuP collaboration ($2M)
  - 250 cores High Performance Computing cluster
  - 500 GB RAM
  - 15 TB storage
- LBNF Simulation work of the collaboration
  - DUNE-ND Geant 4 simulation in ART framework.

BARC: DUNE-ND Dipole

- **DUNE-ND Tracking detectors and ECAL Modules will reside in 0.4T dipole magnetic field volume with inner dimensions 4.5m*4.5m*8.1m.The magnet needs to support and anchor the detectors**

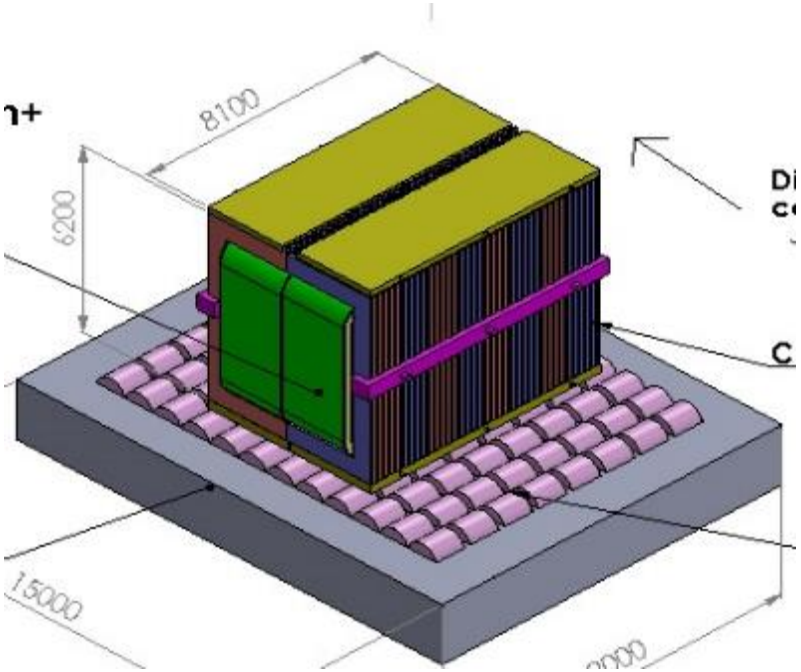

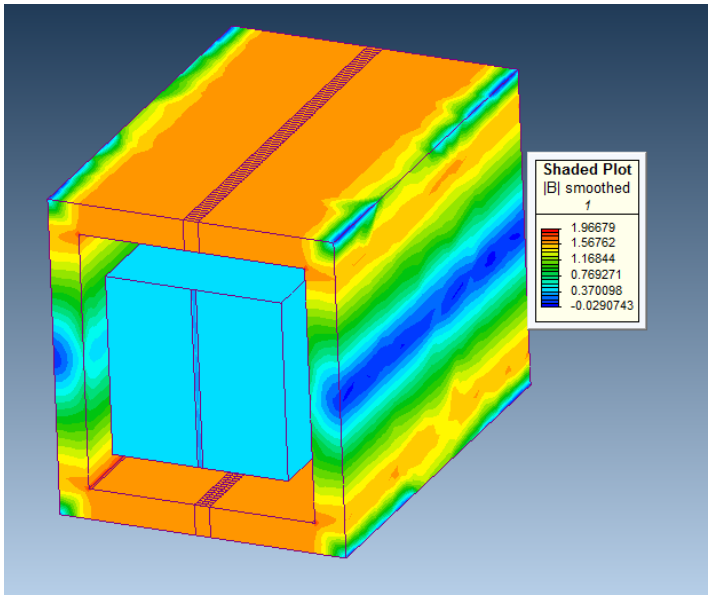

Volumetric Magnet field plot

IIFC-νP: DUNE Far Detector

- **The Detailed Project Report (DPR) submitted by the collaboration to DAE/DST in 2012 also presents the possibilities of Indian Scientists and Engineers participating in the design, prototype and construction of the Far Detector.**
  - **The collaboration has significantly grown since the submission of the DPR.**
  - **In the context of the new DUNE collaboration Fermilab/DOE would like to explore how to best utilize the strength of the Indian collaboration and industry for the DUNE-FD.**
    - **While preserving the Indian Institutions strength and desire to build the High Resolution Fine Grain Tracker DUNE-ND.**
- **We should discuss DUNE-FD collaboration after the Annex-II is signed**

Fermilab: LBNF-Near Detector

LBNF-India proposal is for the US and Indian to jointly build the LBNF Near Detector with India as a leading partner.

IIFC Message

- DAE-DOE Discovery Science Collaboration jointly initiated by the Indian Institutions and Fermilab provides an excellent and unprecedented opportunity for both countries.
  - US-India Strategic Dialogue (Cooperation on Basic Science)
- Accelerator
  - DAE laboratory's (BARC and RRCAT) and Fermilab accelerator designs, components and infrastructures are being developed jointly.
    - Total Project Collaboration
  - Indian domestic interest is in a CW SRF Accelerator
    - We would be a significant collaborator in the Fermilab HISPA development
    - DAE laboratories would work with Fermilab in the construction of PIP-II
  - DAE support the concept that initially the 1 GeV linac will be operated in a pulsed mode to start, as soon as possible, the Long Baseline Neutrino Facility (LBNF) at > 1 MW beam power.
- Physics
  - Indian Institutions are collaborating on LBNF
    - We are interested in the proposed neutrino physics program
    - We are jointly developing the LBNF Near Detector
  - Fermilab physics program is also of interest for
    - Indian universities infrastructure development
    - Indian human resources development

US and Indian Management

IIFC and India Management

Thanks to all

Summary

- India Collaboration is vital for the time execution of the PIP-II.
  - PIP-II is critical for timely start of the Neutrino Physics
- With India Institutions Fermilab is working on R&D topics that spans the whole SRF accelerator.
  - These R&D should conclude by the end of CY18.
  - We are also initiating some work on a few projects for the Phase I of Annex I consistent with our R&D and PIP-II plans.
- At the conclusion of these R&D in by the end of CY18, Fermilab, DOE and DAE will decided on the final deliverable table from DAE → DOE for PIP-II by 2023.
- Indian Institutions have joined MINOS, NOvA and LBNF/DUNE.
  - Expecting India to be a major player in the development of LBNF/DUNE Near and Far Detector.