Status of DOE-DAE Discovery Science Collaboration

C. K. Pithawa

Director E&I Group (Associate Laboratory Director)

Bhabha Atomic Research Center

Department of Atomic Energy

Mumbai, India

2009: Indian Institutions and Fermilab Collaboration

- **The collaboration signed two MOUs to collaborate on**
  - **High Intensity Superconducting Proton Accelerator for the respective domestic programs**
    - **Concept of "Total Project Collaboration" on Accelerator**
      - **Not a typical High Energy Physics collaboration** ⟷
  - **Neutrino Physics Experiments (MINOS, NOvA and LBNE)**
    - **Develop LBNE-ND physics and Experiment**

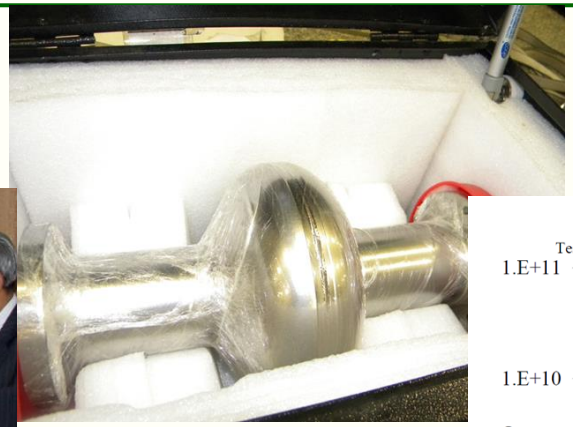

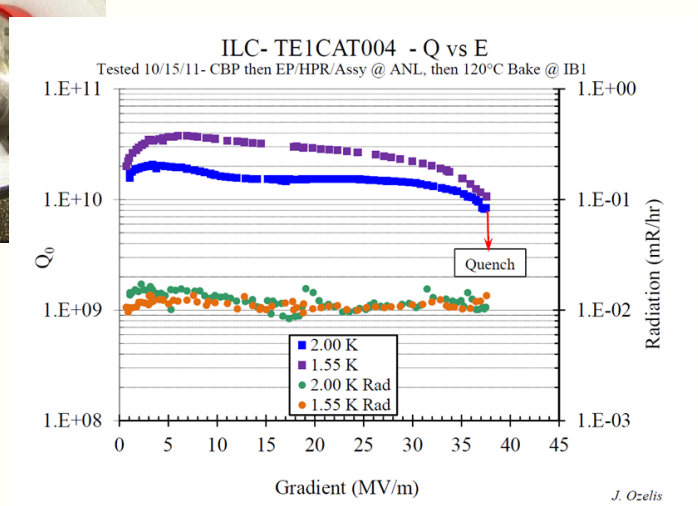

2010: DAE-DOE Discussions

- **Jan 2010, Dr. Dennis Kovar, Associate Director, US-DOE-HEP visited DAE**
  - **Idea of three Phase Collaboration Developed**
    - **Phase 1 (SRF)**
    - **Phase 2 (no-SRF)**
    - **Phase 3 (Construction)**
- **May 2010, Secretary, DAE, requested US-DOE a Road Map for the Fermilab collaboration on High Intensity Proton Accelerator**
  - **Mr. Poneman, Deputy Secretary, DOE and Dr. Banerjee agreed to develop a DOE-DAE agreement**
    - **The concept of "Discovery Science" collaboration emerged**
- **Fermilab and Indian-DAE established working groups to develop plans for**
  - **Project-X and Indian Accelerator Programs**
  - **Indian Collaboration in Fermilab physics program**

July 2011: DOE-DAE Implementing Agreement

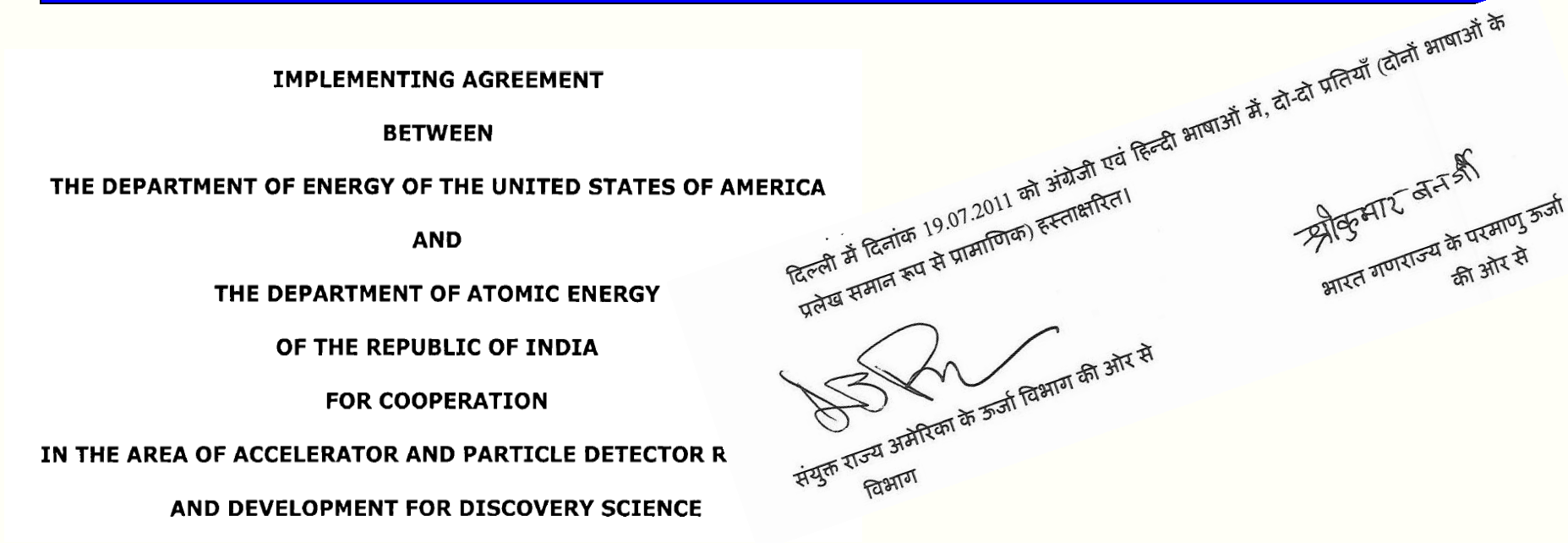

IMPLEMENTING AGREEMENT

BETWEEN

THE DEPARTMENT OF ENERGY OF THE UNITED STATES OF AMERICA

AND

THE DEPARTMENT OF ATOMIC ENERGY

OF THE REPUBLIC OF INDIA

FOR COOPERATION

IN THE AREA OF ACCELERATOR AND PARTICLE DETECTOR R

AND DEVELOPMENT FOR DISCOVERY SCIENCE

दिल्ली में दिनांक 19.07.2011 को अंग्रेजी एवं हिन्दी भाषाओं में, दो-दो प्रतियाँ (दोनों भाषाओं के प्रलेख समान रूप से प्रामाणिक) हस्ताक्षरित।

श्रीकुमार बनर्जी

भारत गणराज्य के परमाणु ऊर्जा की ओर से

संयुक्त राज्य अमेरिका के ऊर्जा विभाग की ओर से

विभाग

<u>Discovery Science</u>: The United States' Department of Energy and India's Department of Atomic Energy signed an Implementing Agreement on Discovery Science that provides the <u>framework</u> for India's participation in the next generation particle accelerator facility at <u>Fermilab</u>. (US State Department)

Technical work under MOU

Covering all aspects of HISPA and Fermilab Neutrino Program

Phase 1 (SRF)

1. "Fermilab, RRCAT, BARC, IUAC and VECC Collaboration on ILC Main Linac SRF Accelerator Technology R&D" (Signed on: October 2, 2007)

2. "SLAC, RRCAT, BARC, IUAC and VECC Collaboration on ILC RF Power Sources and Beam Dump Design R&D" (Signed on: December 3, 2007)

3. "Fermilab and Indian Accelerator Laboratories Collaboration on High Intensity Proton Accelerator and SRF Infrastructure Development" (Signed on: February 10, 2009)

Phase 2 (non-SRF)

4. "Fermilab and Indian Accelerator Laboratories Collaboration on RF Power Development for High Intensity Proton Accelerator" (Signed on: August 22, 2011)

5. "Fermilab and Indian Accelerator Laborator
for High Intensity Proton Accelerator" (Sigr

6. "Fermilab and Indian Accelerator Laborator
on Instrumentation and Control for High Int
August 22, 2011)

7. "Fermilab and Indian Accelerator Laborator
issues for High Intensity Proton Accelerato

Neutrino Physics

8. "US and Indian Institutions Collaboration o
Detector Development" (Signed on: Novem

DAE-DOE Project Annexes

- **Jan 2012**
  - **DOE submitted DRAFT Project Annex I (Accelerator) and Project Annex II (Physics) to DAE**
    - **DOE has received initial approval to proceed for US Agencies**
- **July 2012 – Feb 2013**
  - **DAE, DOE and US Government Agencies worked to finalize the agreement**
- **Feb 2013**
  - **DOE and DAE froze the language of Annex I and II.**
    - **DAE initiated internal India approval process**
- **May - Aug 2013**
  - **Final deliverable document for Annex I was agreed by DAE-DOE**
  - **Collaboration also forwarded a Detailed Project Reports for Annex I & II**
- **Aug 2013**
  - **The Atomic Energy Commission(AEC) of India Recommended Annex I for approval from the Government of India**
    - **It is awaiting the final approval of the Indian cabinet.**
  - **The DAE has given in principle approval to Annex II.**
    - **DAE-DST are working to allocate resources**

Steps: DOE-DAE Agreement

US Side

- HISPA and LBNE
- Fermilab
- DOE-FSO
- DOE-HEP
- DOE-SC
- DOE-International
- State Department
  - C175
- NNSA
- Dept. of Commerce
- OMB
- OSTP

India Side

- HISPA-India and LBNE-India
- DAE-DST Institutions
- BARC
- DAE-International
- DAE
- Atomic Energy Commission of India
- Ministry of External Affairs
- Department of Science and Technology
- Planning Commission
- Ministry of Finance
- Security
- Indian Cabinet

Once the Indian Cabinet approves the Annex I, DAE will inform DOE and will work out a suitable date for signing.

US-India Strategic Dialogue

SCIENCE & TECHNOLOGY DIALOGUE, WASHINGTON, DC ///

MEET THE CATALYST

June 11, 2012

At the end, the Joint Commission recommended several new directions of cooperation including research in the areas of high energy particle physics and gravitational wave detection under the 'Discovery Science Agreement' between Department of Atomic Energy and U.S. DOE. In Basic and Applied sciences — materials research, computer sciences and neurosciences have been identified as potential areas of future engagement.

Discovery Science Collaboration on Accelerator and Physics Programs are Number One deliverables to the Joint US-India Cooperation on Basic Science

DSC Organization is in Place

US-DOE-Fermilab-Collaboration

- Energy Secretary
- DOE-HEP
  - Principal Coordinator
    - Jim Siegrist
  - Technical Coordinator
    - Shekhar Mishra
- Fermilab Director
- Fermilab Project Director(s)
  - Sub-Project Managers
- IIFC Co-Chair (s)
  - Accelerator Collaboration Head
  - Physics Collaboration Head
    - (LBNE Collaboration)

India-DAE-Institutions-Collaboration

- DAE Secretary
  - Director BARC
- DAE-DST-HEP
  - Principal Coordinator
    - Sekhar Basu
  - Technical Coordinator
- BARC Group Director and DAE Laboratory Director and DST Institutional Head(s)
- DAE Project Director
  - Sub-Project Managers
- IIFC Co-Chair(s)
  - Accelerator Collaboration Head
  - Physics Collaboration Head
    - (LBNE-India Collaboration)

Indian Institutions at Fermilab

Before 2006

Now

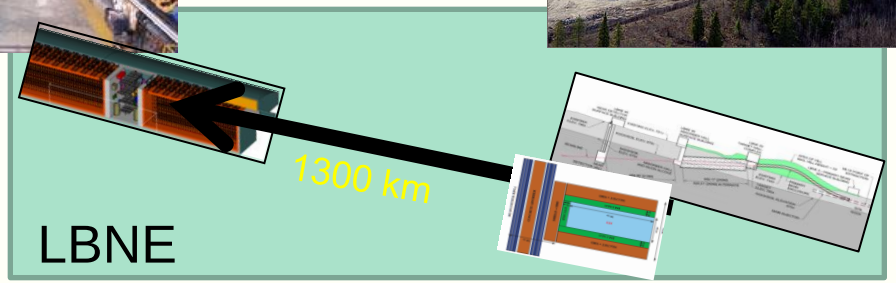

+

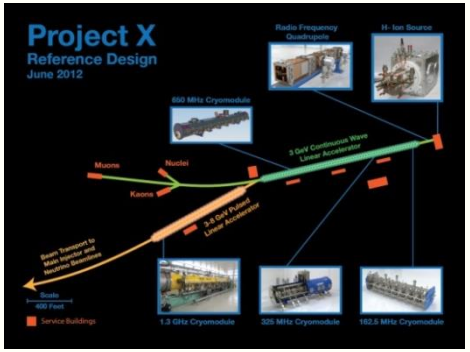

+

DAE-DOE Accelerator Projects

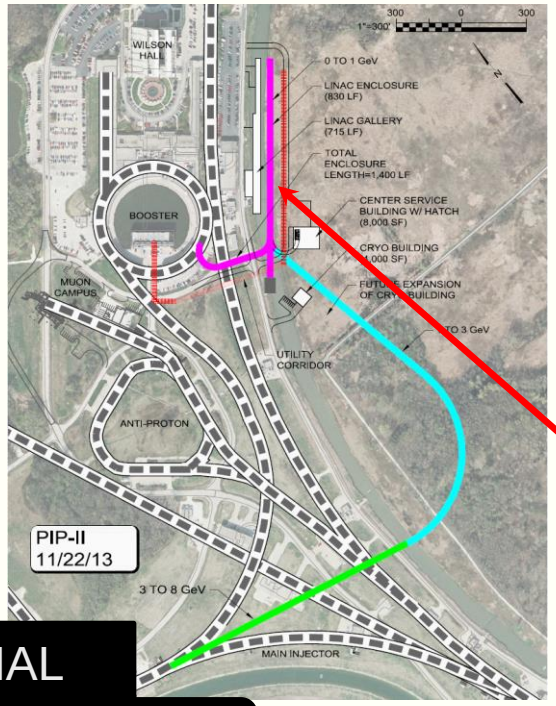

FNAL

Basic Science

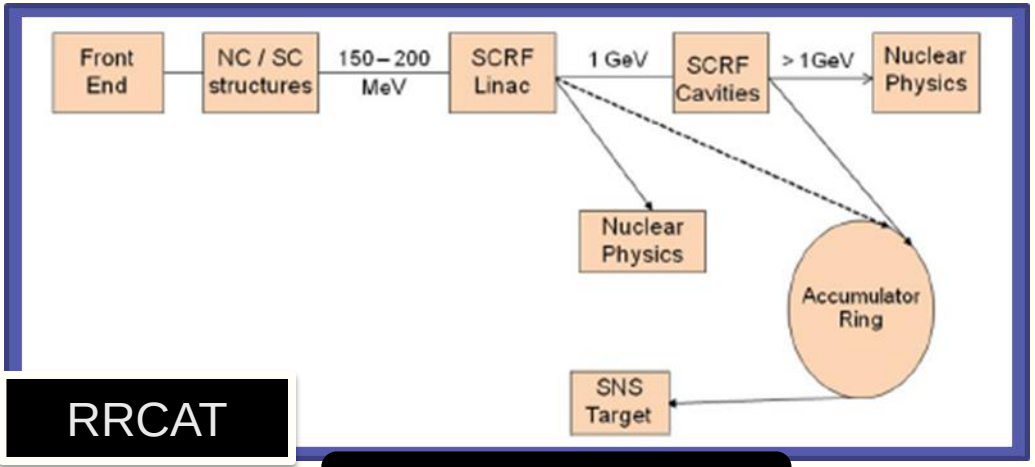

RRCAT

Material Science

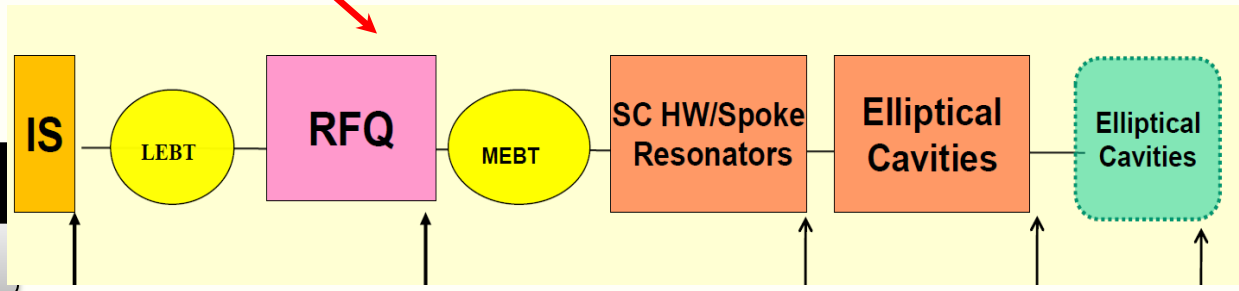

BARC

Industry and Medical

Funding is in the 12th and 13th plan of India

Fermilab, BARC and RRCAT HISPA Design

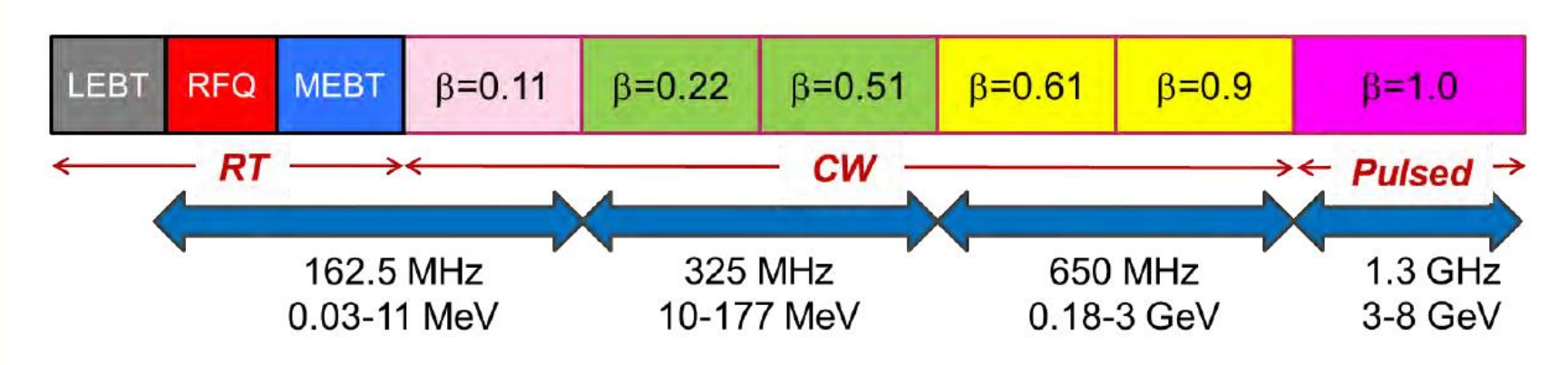

- **Design of the three SRF machines are <u>exactly</u> the same**
  - **DAE laboratories and Fermilab are jointly doing Research, Design and Development of the accelerators and infrastructure**
- **Fermilab HISPA (aka Project X or PIP-II)**
  - **Phase 1: 1 GeV (Pulsed and CW, maximum current 2 mA)**
  - **Phase 2: 1-3 GeV (Pulsed and CW, maximum current 1 mA)**
  - **Phase 3: 3-8 GeV (Pulsed, maximum current 1 mA)**
- **BARC**
  - **1 GeV (CW, maximum current 10 mA)**
- **RRCAT**
  - **1-1.5 GeV (Pulsed, maximum current 1 mA)**

SRF Cavity R&D

1.3 GHz

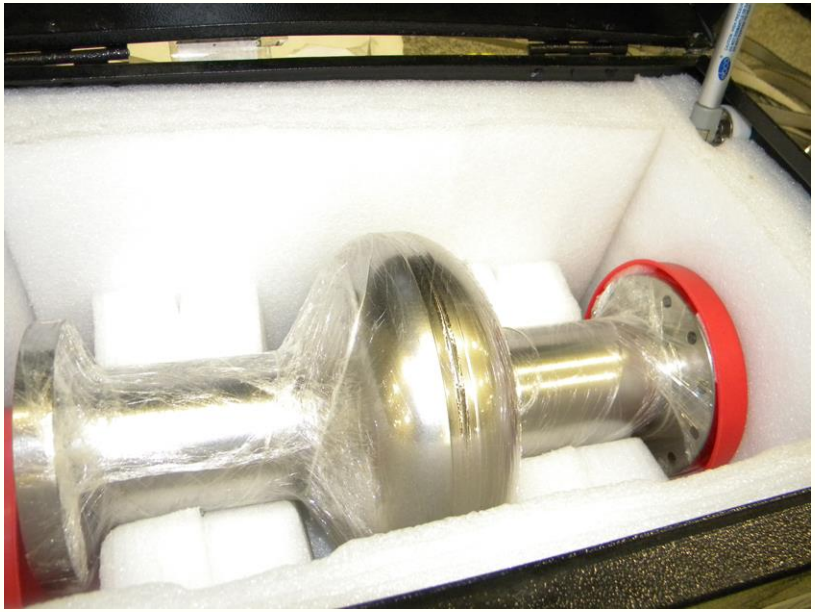

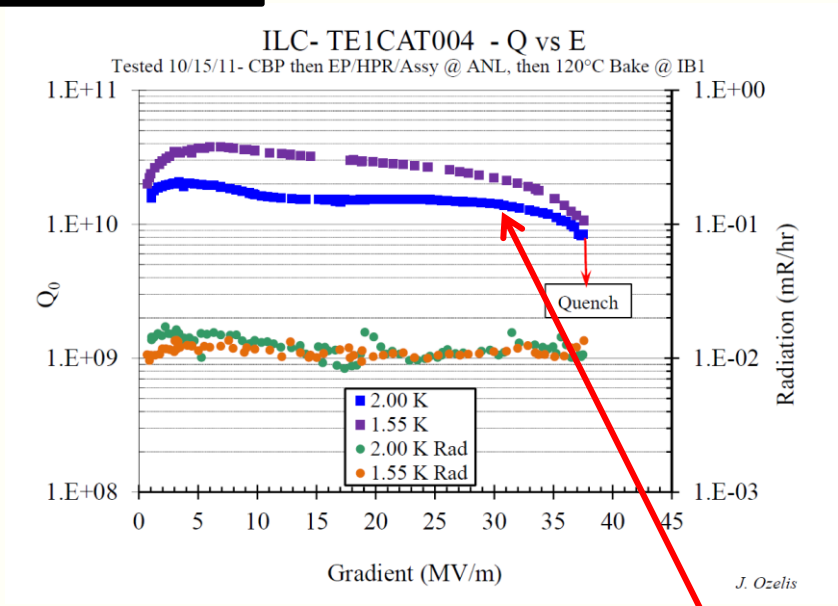

World Class

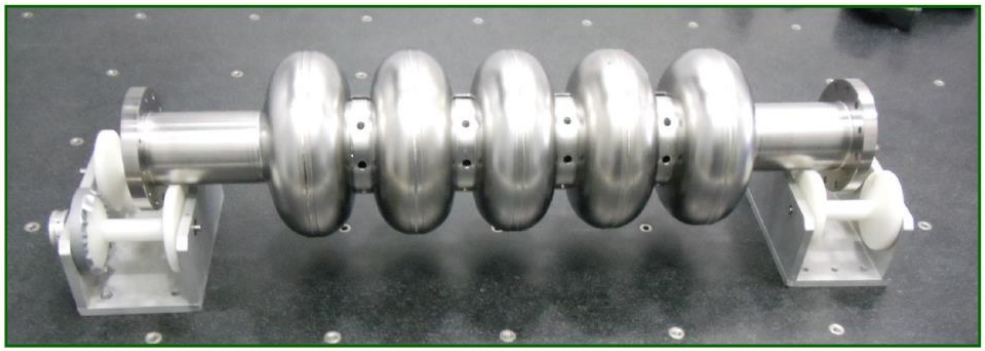

Horizontal Test Stand

- **In collaboration with Fermilab RRCAT is developing a multipurpose CW, Horizontal Test Stand for Fermilab, BARC and RRCAT.**

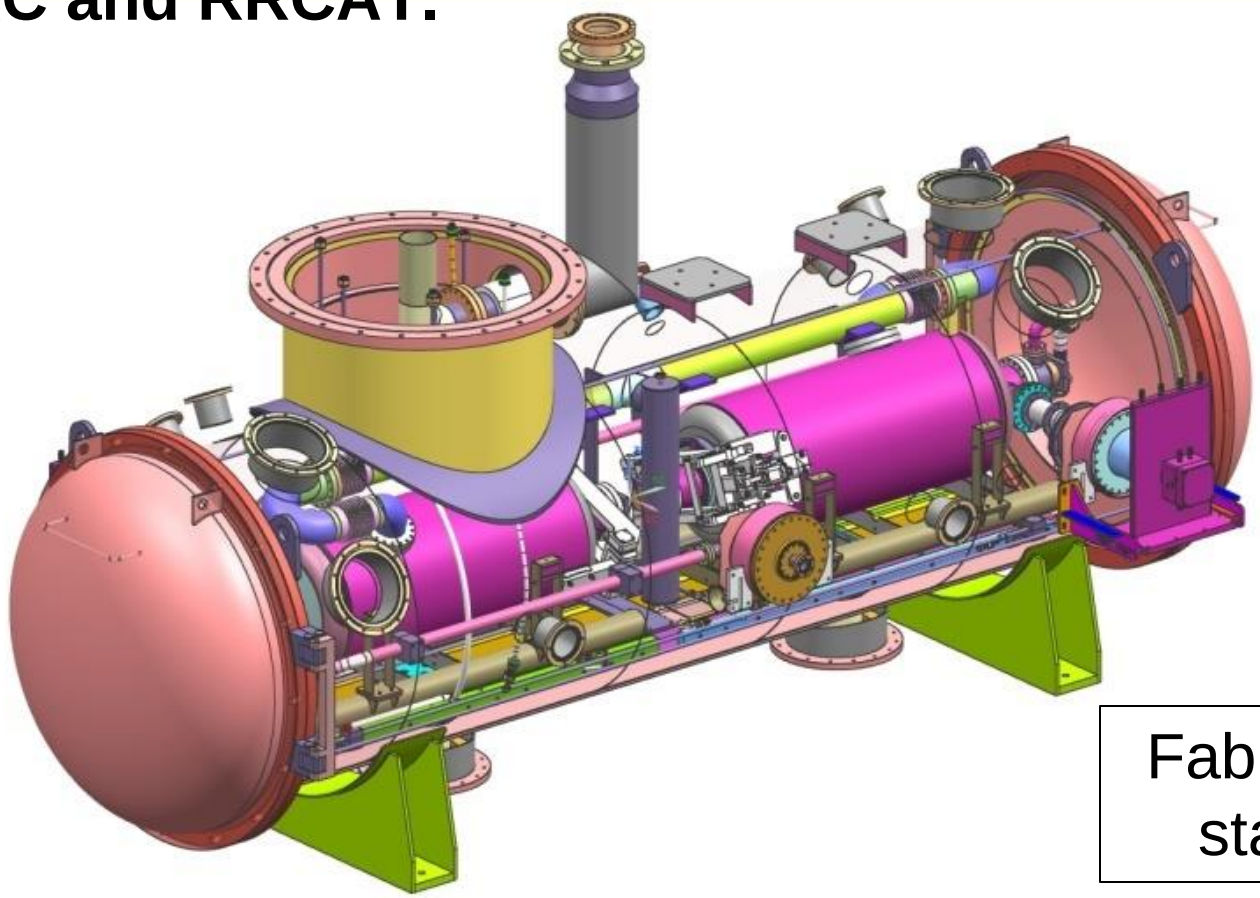

Fabrication to start 2014

325 MHz, 3-7 kW RF

Prototype testing of 3 kW RF amplifier

Fully assembled 3 kW whole Unit

65% efficiency has been achieved for one unit

325 MHz, 7 kW Solid State RF Power Amplifier (SSRFPA) has also been tested for its design values

Project Annex I

Areas of Technical Collaboration

- HISPA Design
- High Intensity Particle Source
- Radio Frequency Quadrupole
- Superconducting Radio Frequency Cavities
- Cavity Helium Vessel and Tuner
- Radio Frequency Power
- High Power Radio Frequency Coupler
- Distribution, monitoring and control of High Power Radio Frequency
- Normal and Superconducting Solenoid, Dipole and Quadrupole magnets
- Beam Instrumentation
- HISPA Control
- Cryogenic Plant, distribution and control
- HISPA utilities including electricity, water, vacuum
- HISPA integration
- Cryo-modules
- Superconducting Radio Frequency Cavity Processing Facilities and Test Stands

PROJECT ANNEX I

TO THE IMPLEMENTING AGREEMENT
BETWEEN
THE DEPARTMENT OF ENERGY OF THE UNITED STATES OF AMERICA
AND
THE DEPARTMENT OF ATOMIC ENERGY
OF THE REPUBLIC OF INDIA
FOR COOPERATION
IN THE AREA OF ACCELERATOR AND PARTICLE DETECTOR RESEARCH AND DEVELOPMENT FOR DISCOVERY SCIENCE
FOR
HIGH INTENSITY PROTON ACCELERATORS

- **The HISPA design, technology, and supporting infrastructure knowledge transfers from DOE to the DAE are the planned in-kind contribution from the United States.**
- **The engineering resources, design, manufacturing, and supply of HISPA accelerator hardware from the DAE to DOE are the planned in-kind contribution from India**
  - **Details of significant "In-Kind" contributions are been finalized by DAE and DOE.**

IIFC: LBNE-ND Detector

- **The details of how the collaboration will develop LBNE-ND is under discussion.**
  - **DAE-DST-Fermilab-India Institutions**
- **Major Subsystems with Indian expertise**
  - **Straw Tube**
  - **Muon ID**
  - **ECAL**
  - **Magnet**
  - **Instrumentation and DAQ**
- **Proposed Schedule**
  - **Conceptual Design CY14**
  - **Preliminary Design CY 15**
  - **Final Design and Prototype CY16**
  - **Infrastructure Development CY16-17**
  - **Construction**

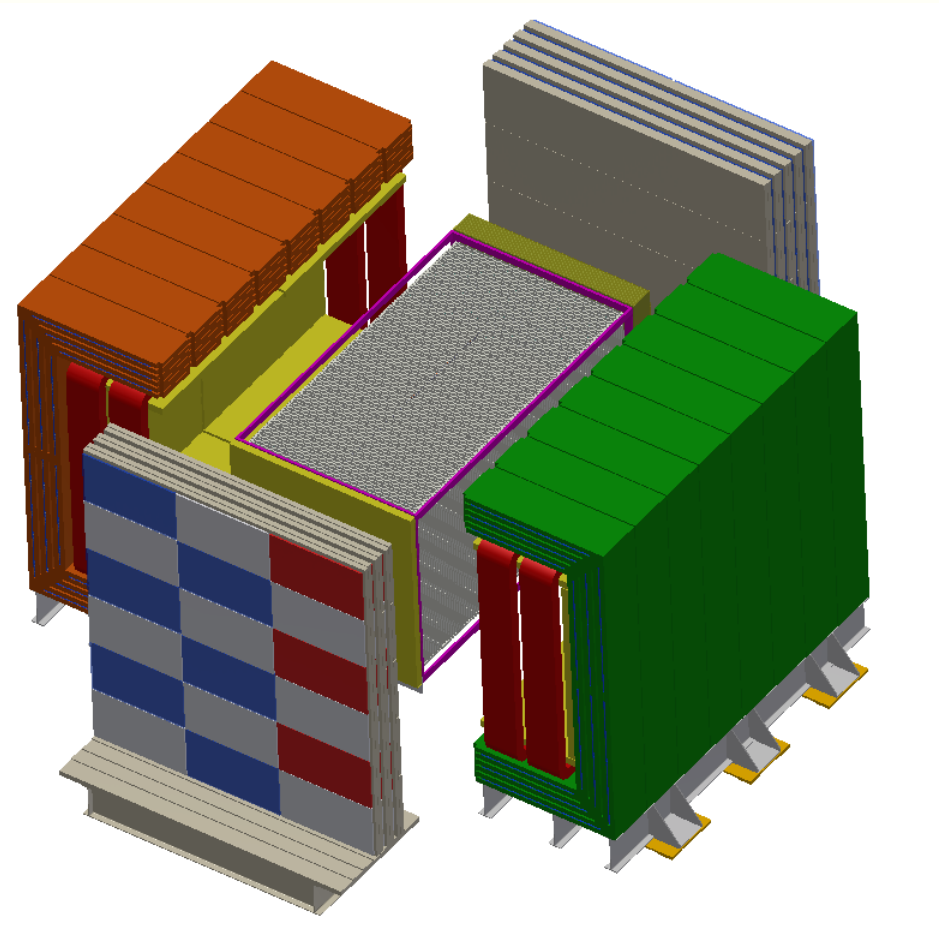

Summary

- **Since 2009, the Indian Institutions and Fermilab Collaboration has made considerable technical progress in jointly developing SRF technology for proton accelerator**
  - **At present almost every component of SRF accelerator is under prototyping at Indian laboratories.**
  - **DAE laboratories have developed significant infrastructure to support construction projects**
- **Indian Institutions have joined MINOS, NOvA and LBNE.**
  - **Playing a major role in the development of LBNE-ND**
- **DAE is looking forward to the conclusion of the legal agreement phase with DOE by the signing of the Project Annex I and II.**
  - **Under the agreement DAE-DOE will jointly develop technology for the SRF accelerators for respective domestic programs**
  - **DAE is positioned to make significant contribution to Fermilab program HISPA**
  - **DAE and DST will contribute to LBNE**

DAE Message to P5

- **DAE-DOE Discovery Science Collaboration jointly initiated by the Indian Institutions and Fermilab provides an <u>excellent and unprecedented opportunity for both countries.</u>**
  - **It is part US-India Strategic Dialogue (Cooperation on Basic Science)**
- **Accelerator**
  - **DAE laboratory's (BARC and RRCAT) and Fermilab accelerator designs, components and infrastructures are being developed jointly.**
    - **Total Project Collaboration**
  - **Indian domestic interest is in a CW SRF Accelerator**
    - **We would be a significant collaborator in the Fermilab HISPA development**
  - **DAE laboratories would work with Fermilab in the construction of the Phase 1 of the HISPA.**
    - **We would prefer if it is build to provide CW beam with a maximum of 2 mA current.**
  - **DAE support the concept that initially the 1 GeV linac will be operated in a pulsed mode to start, as soon as possible, the Long Baseline Neutrino Experiment (LBNE) at > 1 MW beam power.**
- **Physics**
  - **Indian Institutions are collaborating on LBNE**
    - **We are interested in the proposed neutrino physics program**
    - **We are jointly developing the LBNE Near Detector**
  - **Fermilab physics program is also of interest for**
    - **Indian universities infrastructure development**
    - **Indian human resources development**